CYLINDER HEAD ASSY SM CLASSIC

NO	（PARTCODE）	（ENGLISH DESCRIPTION）	QTY
1	100100400-0001	Screw	2
2	100208911	Gasket	2
3	100205589-0006	Upper Cover Cylinder Head	1
4	100100868	Dowel Pin,ϕ8×14×ϕ6.3	1
5	100208438	Seal Ring,Of Upper Cover Cylinder Head	1
6	100100505-0001	Nut M7	4
7	100011168-0001	Bolt, M5×12	1
8	100011259-0003	Bolt, M6×8	1
9	100205687	Spring	1
10	100205686	Cylinder Head Tappet	1
11	100104136	Spark Plug	1
12	100100449-0002	Bolt,M8×44	2
13	100011171-0002	Bolt, M6×12	1
14	100106379	Washer,ϕ6.5×1.5×ϕ18	1
15	100207764-0007	Cylinder Head Assy	1
16	100010836-0006	Bolt, M6×12	1
17	100011545-0001	Bolt, M6×100	2
18	100106562	Washer,ϕ6.2×1×ϕ10	1
19	100106538	Washer,ϕ6.2×1.5×ϕ13	1

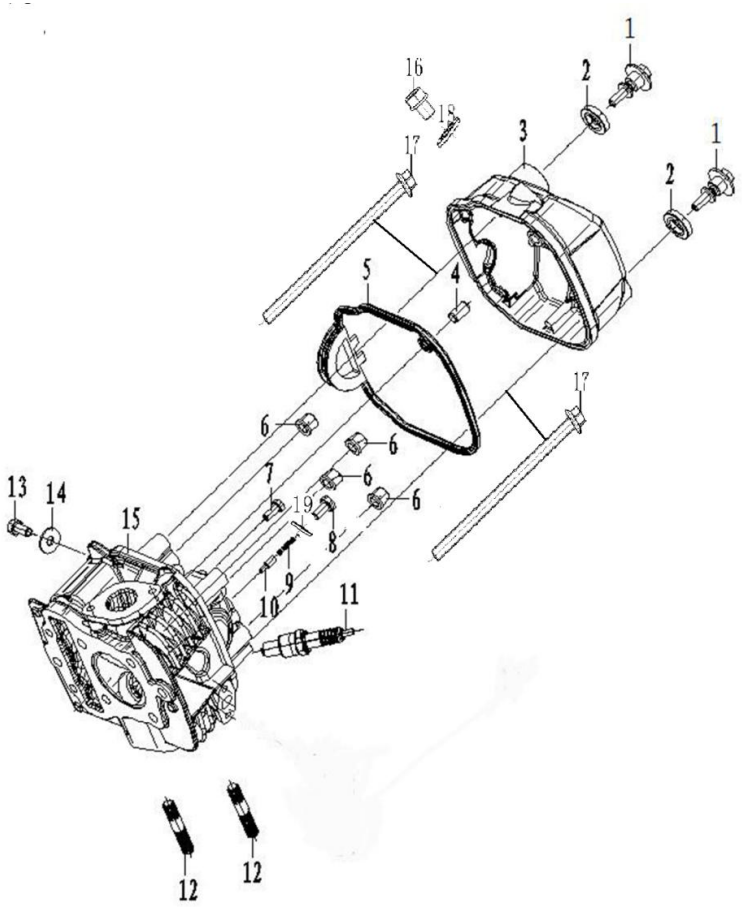

CYLINDER ASSEMBLY SM CLASSIC

NO	（PARTCODE）	ENGLISH DESCRIPTION）	QTY
1	100101211	Dowel Pin,ϕ8×14×ϕ7	2
2	100208820	Gasket Assy Cylinder Head	1
3	100200331	Guide Chain Roller Set	1
4	100106544	Washer,ϕ8×1.5×ϕ14	1
5	100105067-0006	Guide Chain Roller Pin	1
6	100207347-0004	Cylinder Block Assembly	1
7	100208554	Gasket Cylinder Block	1
8	100101210	Dowel Pin,ϕ8×12×ϕ7	2

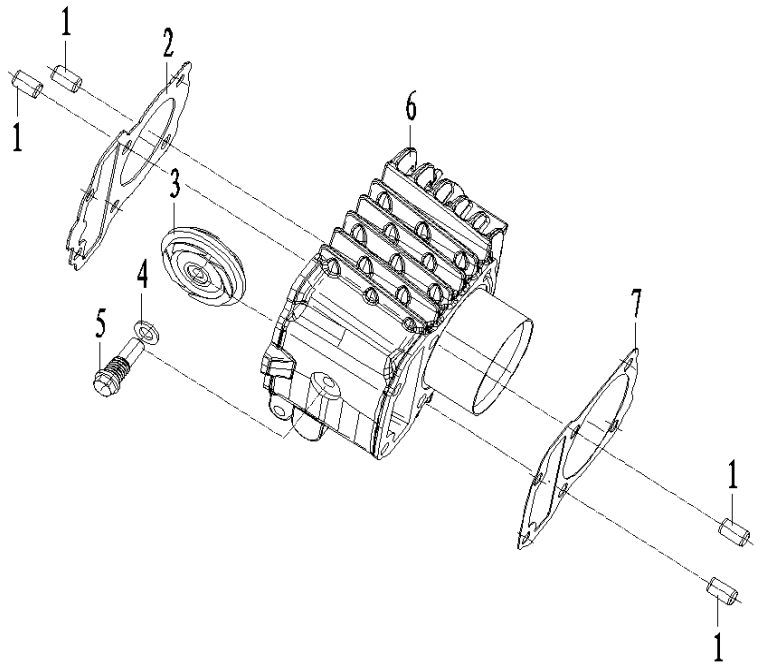

VALVE MECHANISM SM CLASSIC

NO	PARTCODE	NENGLISH DESCRIPTION	QTY
1	100105320	Valve Locker	4
2	100105305	SpRing,Seat	2
3	100200719	Inner SpRing,Assy	2
4	100105334	Seal Valve Stem	2
5	100200700	Outer Valve SpRing,Retainer	2
6	100200574	Intake Valve	1
7	100200620	Exhaust Valve	1
8	100011168-0001	Bolt, M5×12	2
9	100200357	Rocker Shaft	1
10	100200409	Rocker Arm Assembly Valve	1
11	100124271	Gamp Shaft Comp	1
12	100200407	Rocker Arm Assembly Valve	1
13	100200356	Rocker Shaft	1
14	100105033	Timing Driven Sprocket	1
15	100105104	Sproket Chain	1
16	100200449	Axle Tensioner Lever	1
17	100200552	Chain Adjusting Set	1
18	100105239	Plug Of Tightener	1
19	100105253	Cam Chain Tensioner Push Rod	1
20	100105204	Spring	1
21	100106552	Washer,ϕ14×1.5×ϕ20	1
22	100100343-0007	Sealing Plug M14×1.5	1

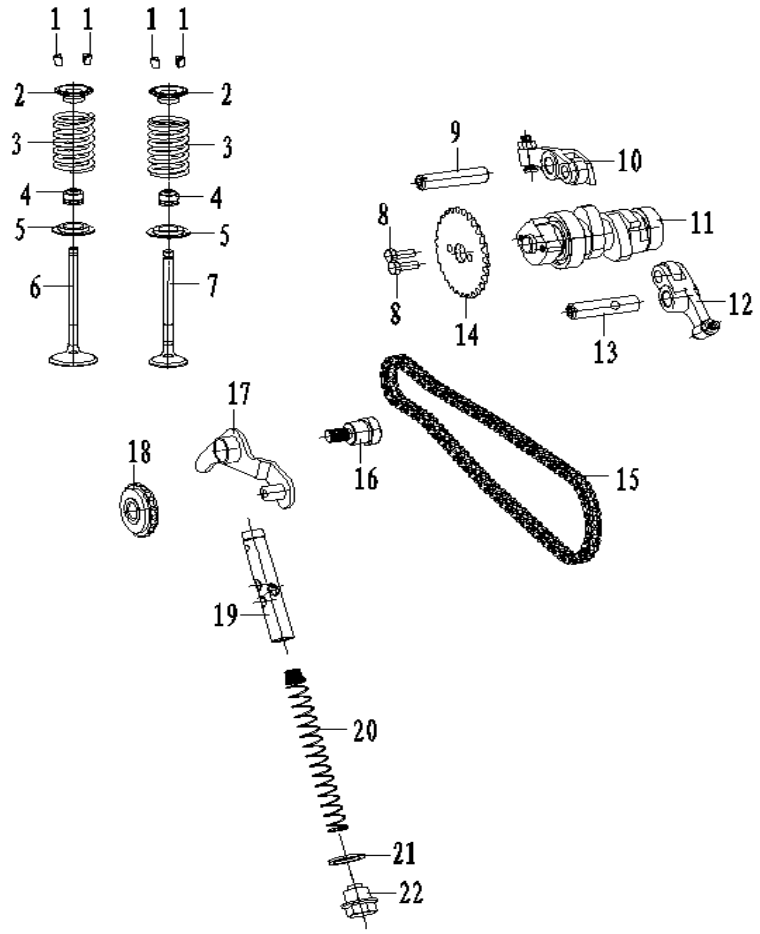

RIGHT CRANKCASE COVER SM CLASSIC

NO.	(PARTCODE)	(ENGLISH DESCRIPTION)	QTY
1	100100868	Dowel Pin,ϕ8×14×ϕ6.3	2
2	100203197	Clutch Tappet	1
3	100208633	Gasket R.Crankcase Cover	1
4	100104880	Oil Ruler Assy	1
5	100011538-0003	Bolt, M6×40	10
6	100011422-0004	Nut, M8	1
7	100059272	Washer, ϕ8	1
8	100107836	Washer	1
9	100104729	Oil Seal 13.8×24×5	1
10	100059475-0018	Cover Comp Right Crankcase	1
11	100059475-0020	Cover Comp Right Crankcase (SM SPORT)	1

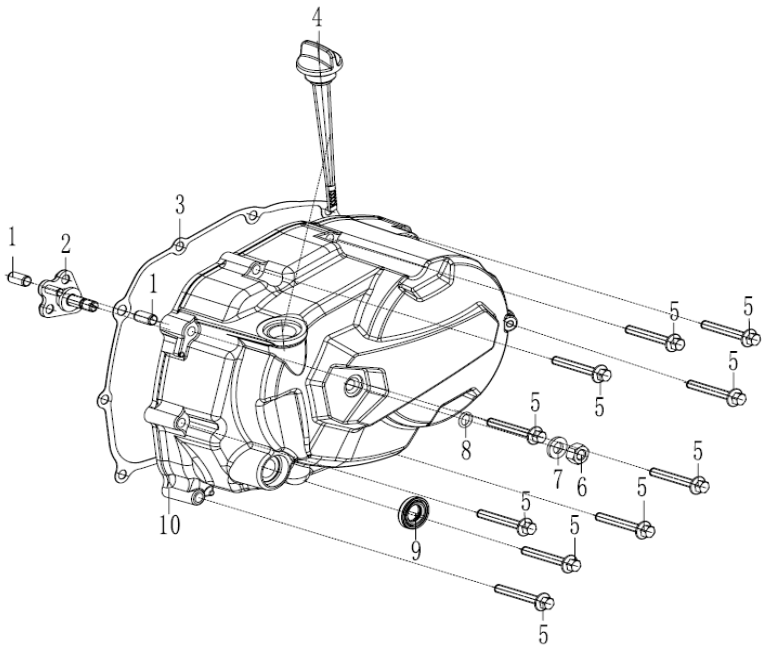

LEFT CRANKCASE COVER SM CLASSIC

NO.	(PARTCODE)	(ENGLISH DESCRIPTION)	QTY
1	100100868	Dowel Pin,ϕ8×14×ϕ6.3	2
2	100208512	Gasket L.Crankcase Cover	1
3	100058422-0003	Front Part,L.Crankcase Cover	1
4	100011537-0002	Bolt, M6×35	8
5	100010118	O-Ring,ϕ13.2×2.65	1
6	100103059-0021	Cap Small View Hole	1
7	100103062-0020	Cap Big View Hole	1
8	100107733	O-Ring,ϕ27.4×2.65	1
9	100102915-0005	Clip Overflow Pipe	1
10	100082331-0020	Back Part,L.Crankcase Cover	1
11	100055588-0006	Bolt, M6×20	2

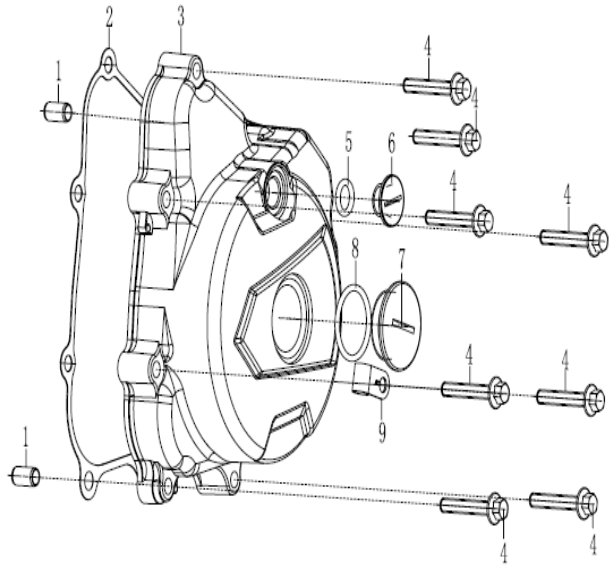

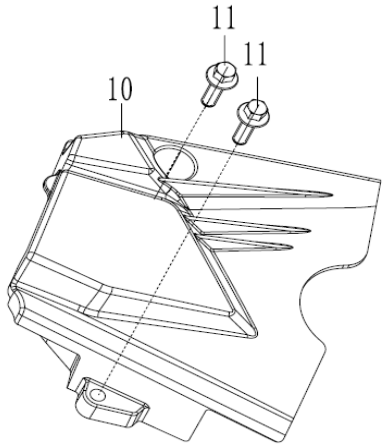

CLUTCH ASSY SM CLASSIC

NO.	（PARTCODE）	（ENGLISH DESCRIPTION）	QTY
1	100203203	Cam Plate Assembly Clutch	1
2	100124273	BeaRing,(6200_C3)	1
3	100100514	Lock Nut Clutch	1
4	100103344	Dish Washer,Clutch	1
5	100011264-0003	Bolt, M6×16	4
6	100071034	End Cover Clutch	1
7	100071035	Clutch Disengage SpRing,Seat	1
8	100071033	Butterfly Spring	1
9	100071032	Center Sleeve Clutch	1
10	100071030	Drive Friction Disk	2
11	100071031	Clutch Driven Disc	2
12	100071029	Drive Friction Disk	1
13	100071028	Pressure Plate Clutch	1
14	100300812	Washer,ϕ17.1×1.6×ϕ29	1
15	100301403	Out Case Assembly Clutch	1
16	100105824	Sleeve Clutch	1
17	100301341	Washer	1
18	100103458	Thrust Washer,Primary Clutch	1
19	100303510	Outer Case Assembly Primary Clutch	1
20	100067590	Drive Disk Assembly Primary Clutch	1
21	100103459	Stop Washer,Primary Clutch	1
22	100103344	Dish Washer,Clutch	1
23	100100528	Lock Nut Primary Clutch	1
24	100104614	Gasket Primary Clutch Cover	1
25	100103460	Cover Primary Clutch	1
26	100031847-0006	Screw, M5×8	3
27	100202930	Oil Insulating Clutch	1
28	100011173-0003	Bolt, M6×16	2
29	100067591	Clutch Assy	1

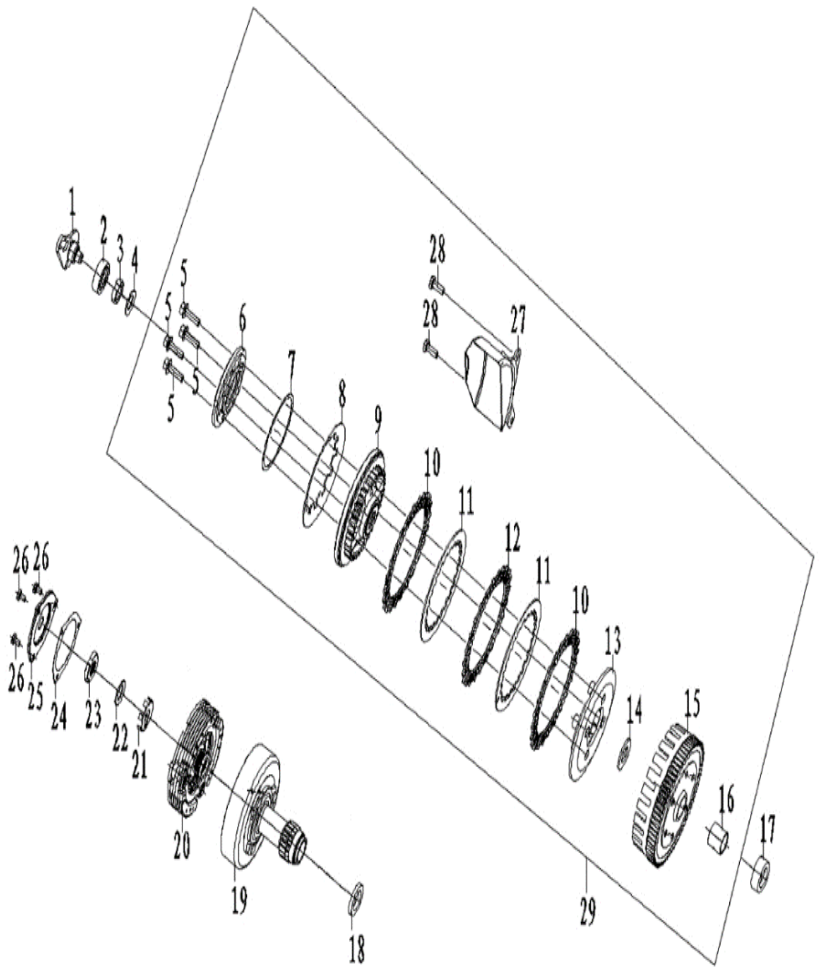

OIL PUMP SM CLASSIC

NO.	（PARTCODE）	（ENGLISH DESCRIPTION）	QTY
1	100010986-0003	Screw, M5×10	3
2	100100159	Oil Pump Cover	1
3	100204600	Outer Rotor Oil Pump	1
4	100204573	Inner Rotor Oil Pump	1
5	100204475	Shaft Oil Pump	1
6	100031852-0005	Screw, M6×16	2
7	100031854-0002	Screw, M6×22	1
8	100204541	Oil Pump Body	1
9	100104601	Gasket Oil Pump	1
10	100200060	Oil Pump Sprocket Shaft	1
11	100104953	Hub Dump Chain Sprocket Oil Pump	1
12	100204455	Oil Pump Assy	1

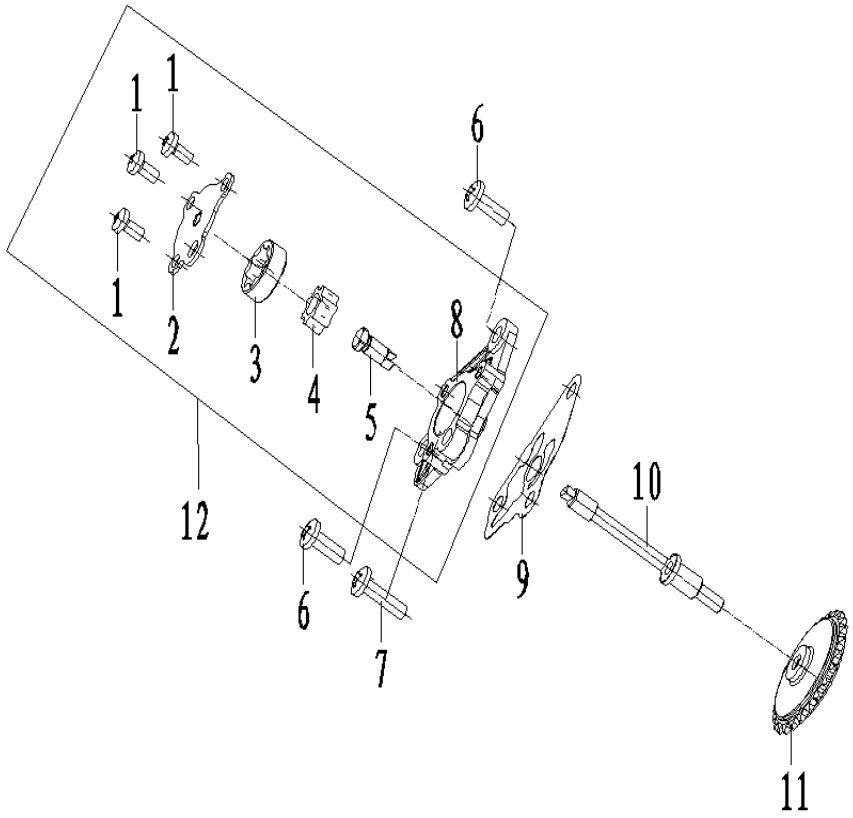

LEFT CRANKCASE SM CLASSIC

NO.	(PARTCODE)	(ENGLISH DESCRIPTION)	QTY
1	100100232	Cylinder Stud Bolt A	2
2	100100973	BeaRing,(6001)	1
3	100100988	Bearing, 6203	1
4	100102939-0009	Left Crankcase Block	1
5	100011542-0001	Bolt, M6×60	10
6	100011544-0001	Bolt, M6×75	1
7	100104696	Oil Seal 17×29×5	1
8	100104663	Oil Seal 12×22×7	1
9	100200556	Press Plate Of Tensioner Push Rod	1
10	100011171-0002	Bolt, M6×12	1
11	100033099-0006	Bolt, M6×18	1
12	100106538	Washer,ϕ6.2×1.5×ϕ13	1

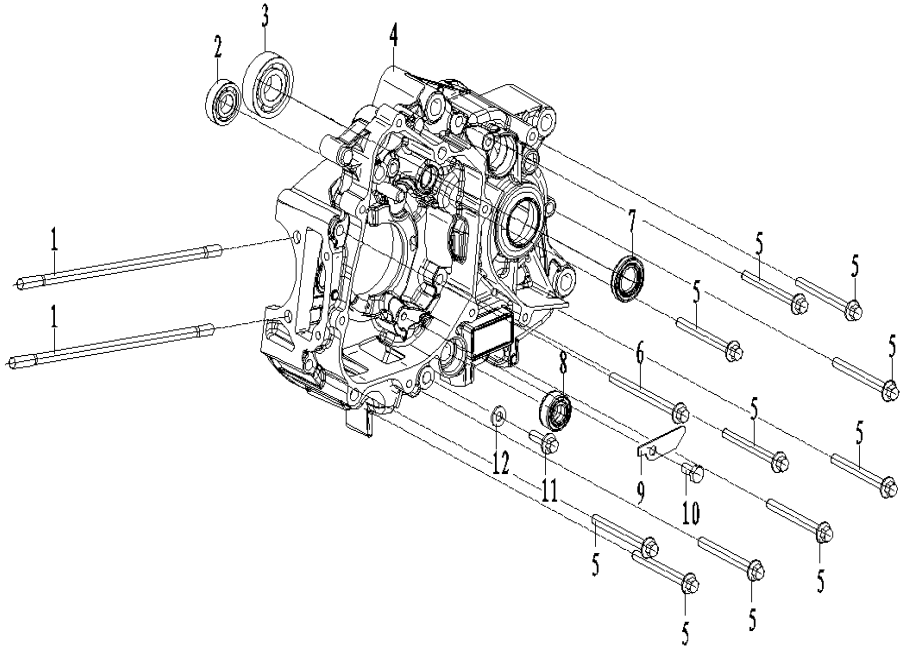

RIGHT CRANKCASE SM CLASSIC

NO.	(PARTCODE)	(ENGLISH DESCRIPTION)	QTY
1	100100232	Cylinder Stud Bolt A	2
2	100103017-0008	Right Crankcase Block	1
3	100106357	Washer,ϕ6.2×1.5×ϕ20	2
4	100100988	Bearing, 6203	1
5	100104941	Strainer Oil Filter	1
6	100100392	Bolt Return Springn Fixing,8×11	1
7	100100983	BeaRing,(6201)	1
8	100106548	Washer,ϕ12.1×2×ϕ20	1
9	100100331-0006	Oil Drain Plug	1
10	100010557	Pin,ϕ10×14	2
11	100011171-0002	Bolt, M6×12	2

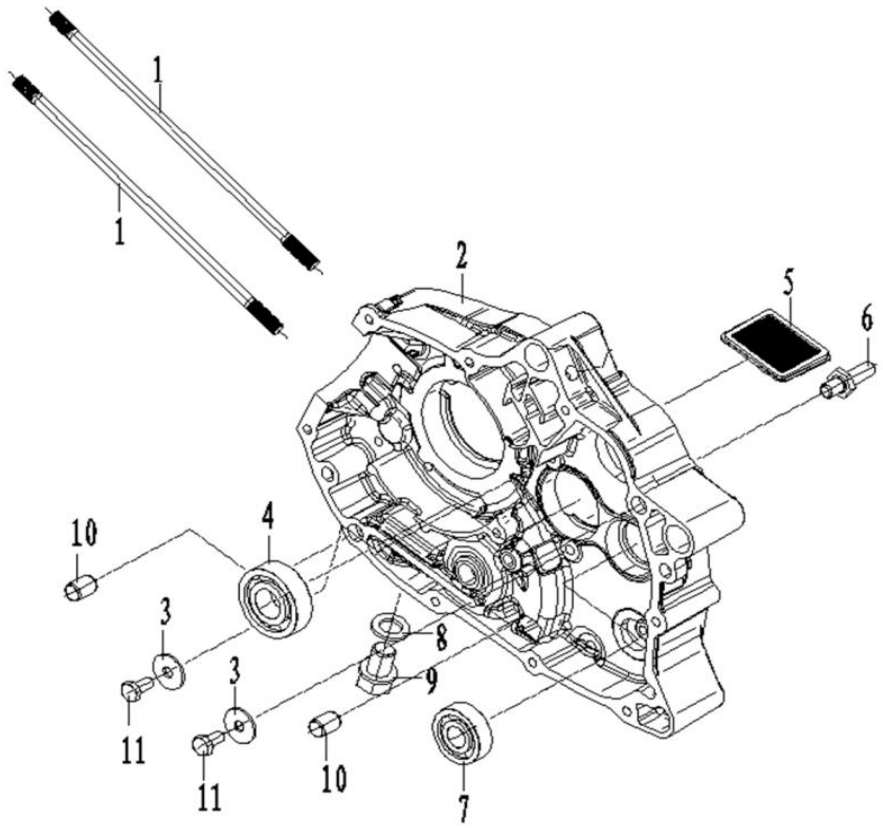

CRANKSHAFT CONNECTING-ROD ASSY/PISTON SM CLASSIC			
NO.	(PARTCODE)	(ENGLISH DESCRIPTION)	QTY
1	100206369	Piston Ring,1	1
2	100101561	Piston Ring,2	1
3	100101689	Oil Ring,Assy	2
4	100101693	Piston Ring	1
5	100100580	Check Ring Piston Pin	2
6	100101361	Piston	1
7	100101503	Pin,Piston	1
8	100063722	Timing Driven Sprocket	1
9	100124322	Bearing	2
10	100055070	Left Crank	1
11	100100643	Semicircular Key	1
12	100071617	Connecting Rod	1
13	100071618	Pin,Piston	1
14	100010934	Steel Ball, ϕ6.35	1
15	100101170	Needle BeaRing,(Kt25.1×30.1×13.8)	1
16	100071616	Right Crank	1
17	100129171	Bent Axle Connecting Rod	1
18	100124272	Crankshaft Connecting-Rod Assy	1
19	100101580	Piston Ring,Comp	1

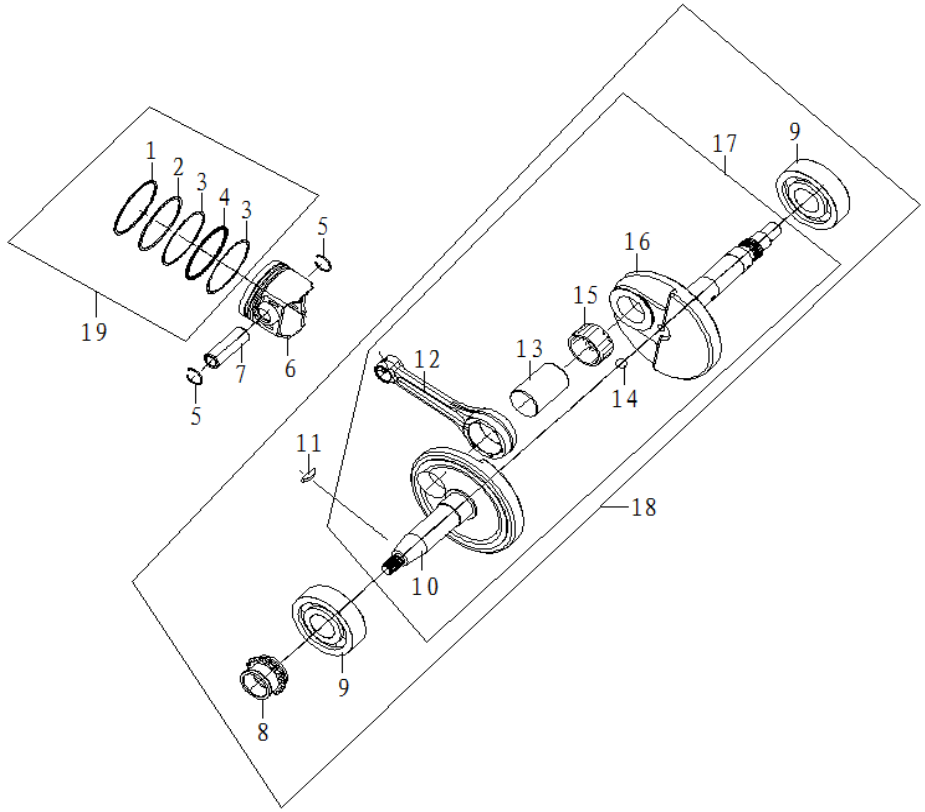

TRANSMISSION MAIN,COUNTER SHAFT SM CLASSIC

NO.	(PARTCODE)	(ENGLISH DESCRIPTION)	QTY
1	100301872	Transmission Main Shaft	1
2	100105975	Gear M-3	1
3	100103645	Washer,15.5(17.2)×1.2×21	2
4	100103657	Circlip	2
5	100105976	Gear M-4	1
6	100105974	Gear M-2	1
7	100106501	Washer,ϕ12.1×1×ϕ23	2
8	100106520	Washer,ϕ17.2×1.2×ϕ26	1
9	100106090	Gear C-1	1
10	100301963	Damping SpRing,Countershaft	1
11	100106333	Washer,ϕ20.1×3.5×ϕ27	1
12	100301969	Limit Plate Gearshift	1
13	100106529	Washer,ϕ20.5×1.5×ϕ33	1
14	100301305	Washer	2
15	100301314	Fixing Ring,Clutch	2
16	100106092	Gear C-1	1
17	100100628	Check Ring,ϕ18.5	1
18	100106091	Gear C-1	1
19	100301934	Transmission Counter Shaft	1
20	100106418	Washer ϕ15.2×1×ϕ25	1
21	100106089	Gear C-1	1
22	100106181	Collar	1
23	100073151	Main Shaft Transmission	1
24	100063723	Countershaft Assembly	1
25	100103800	Drive Sprocket	1
26	100203657	Fixing Plate Drive Sprocket	1
27	100031911-0004	Bolt, M6×10	2
28	100203284	Transmission Main Counter Shaft	1

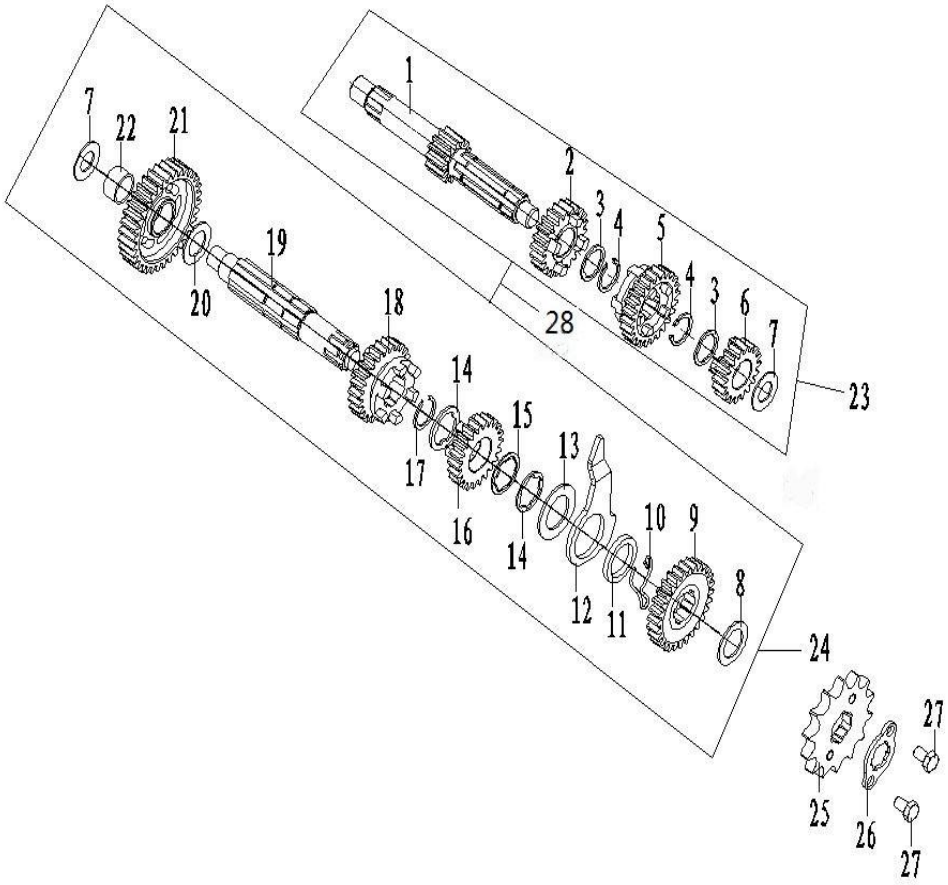

KICK STARTING SHAFT ASSEMBLY SM CLASSIC

NO.	(PARTCODE)	(ENGLISH DESCRIPTION)	QTY
1	100300798	Washer,ϕ14.2×1×ϕ21	1
2	100105725	Sleeve	1
3	100201900	Return SpRing,Kick Starting Shaft	1
4	100100596	Circli,ϕ18.5×1.2×ϕ22.1	2
5	100303358	Friction Spping Starter	1
6	100303337	Starting Ratchet	1
7	100106527	Washer,ϕ20.2×1×ϕ27	1
8	100105768	Gear Kick Starter	1
9	100080312	Pivot Kick Starting Shaft	1
10	100201892	Seat SpRing,Kick Starting Shaft	1
11	100100595	Circli,ϕ15.5×1.2×ϕ19	1
12	100080311-0001	Kick Starting Shaft Assembly	1

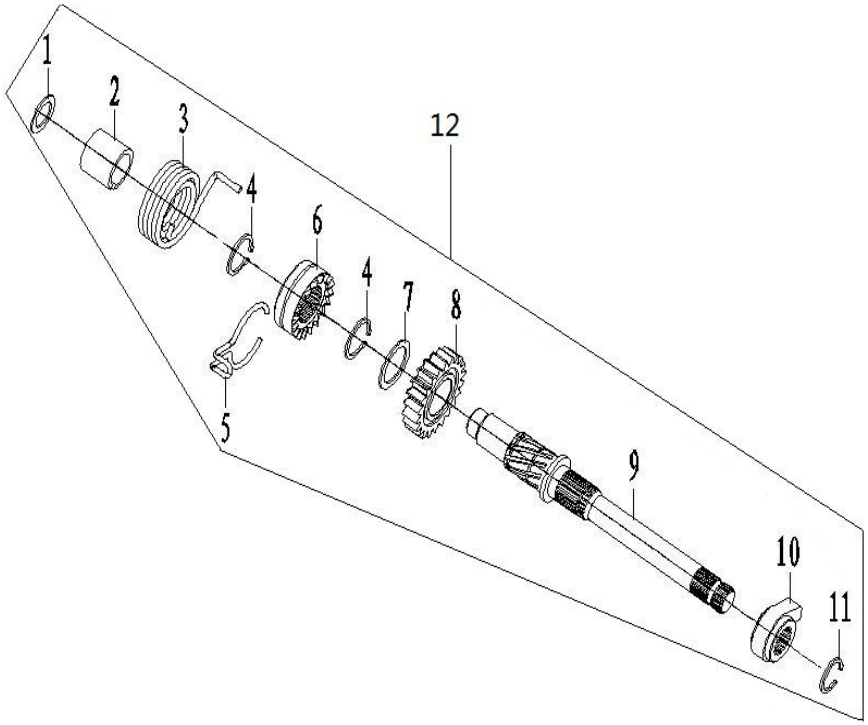

GEARSHIFT MECHANISM SM CLASSIC

NO	(PARTCODE)	(ENGLISH DESCRIPTION)	QTY
1	100103980	SpRing, Locating Plate	1
2	100203957	Locating Plate Assy	1
3	100011264-0001	Bolt, M6×16	1
4	100203806	Stopping Plate	1
5	100203854	Press Plate Of Gearshift Drum	1
6	100100887	Pin ϕ3×8.5	2
7	100100901	Pin ϕ4×13	5
8	100054748	Gearshift Drum	1
9	100086223	Right Fork Countershaft	1
10	100103891	Guide Pin	2
11	100103892	Clip,Spring	2
12	100086224	Center Fork Mainshaft	1
13	100103948	Spring	1
14	100103947	Pin	1
15	100104497-0001	Gearshift Switch Lamp	1
16	100106229	Sleeve Of Gearshift Lever Comp	1
17	100103969	Return Spring	1
18	100065373	Gearshift Shaft Combination	1
19	100303630	Gearshift Shaft Comp	1
20	100051306	Clutch Manipulate Arm Combination	1
21	100203877	Gearshift Lever Comp	1
22	100086222	Gearshift Drum Comp	1
23	100011266-0004	Bolt, M6×20	1

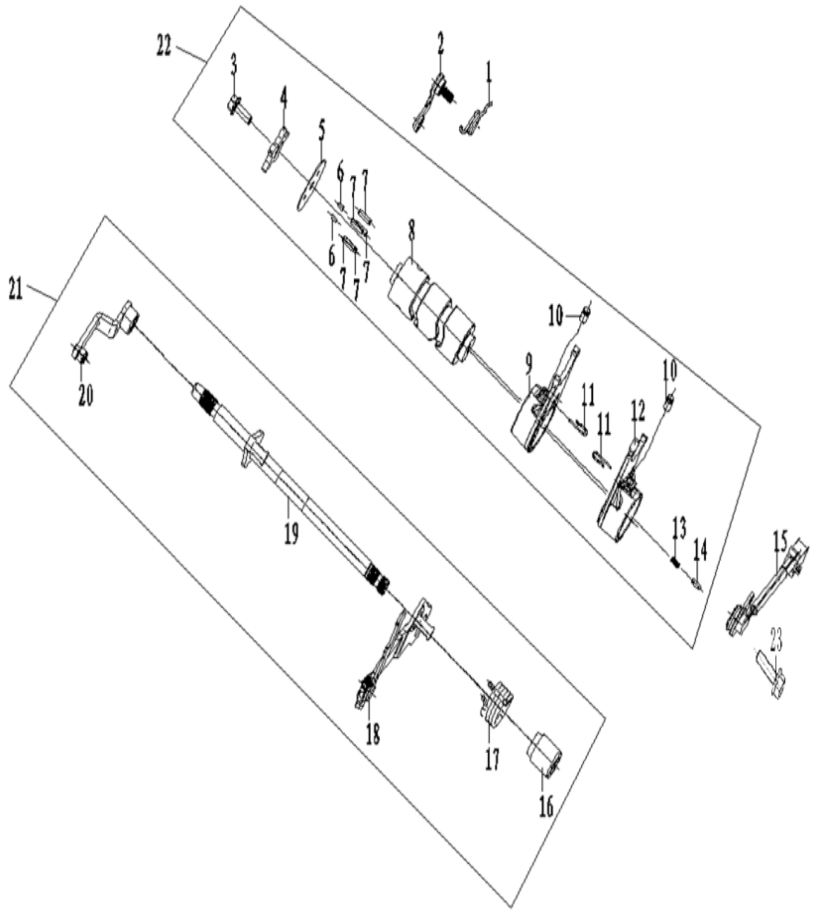

MAGNETO COMP SM CLASSIC

NO.	(PARTCODE)	(ENGLISH DESCRIPTION)	QTY
1	100104176-0001	Stator Assy Magneto	1
2	100055589-0006	Bolt, M6×16	2
3	100055588-0006	Bolt, M6×20	2
4	100204698-0001	Nut	1
5	100106360	Washer,ϕ10.5×3×ϕ24	1
6	100205249	Rotor Assy Magneto	1

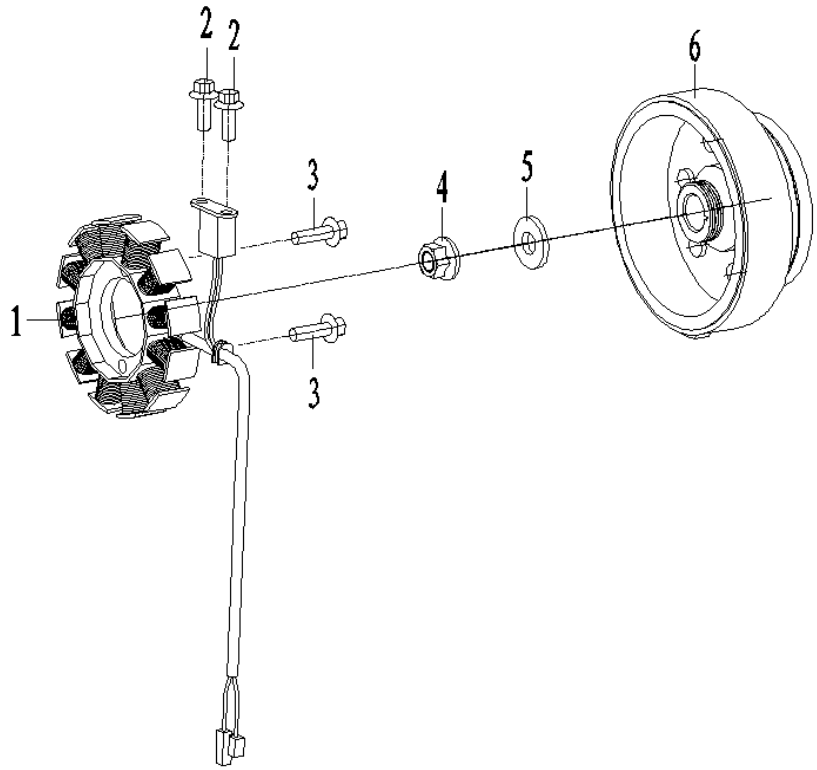

ELECTRIC STARTING MECHANISM SM CLASSIC

NO.	(PARTCODE)	(ENGLISH DESCRIPTION)	QTY
1	100202714	Starter Gear	1
2	100202703	Twin Gear Set	1
3	100202639	Shaft Reduction	1
4	100101014	Needle BeaRing,(K20×26×18)	1
5	100104222-0003	Starting Motor Assy	1
6	100031957-0007	Bolt, M6×32	2

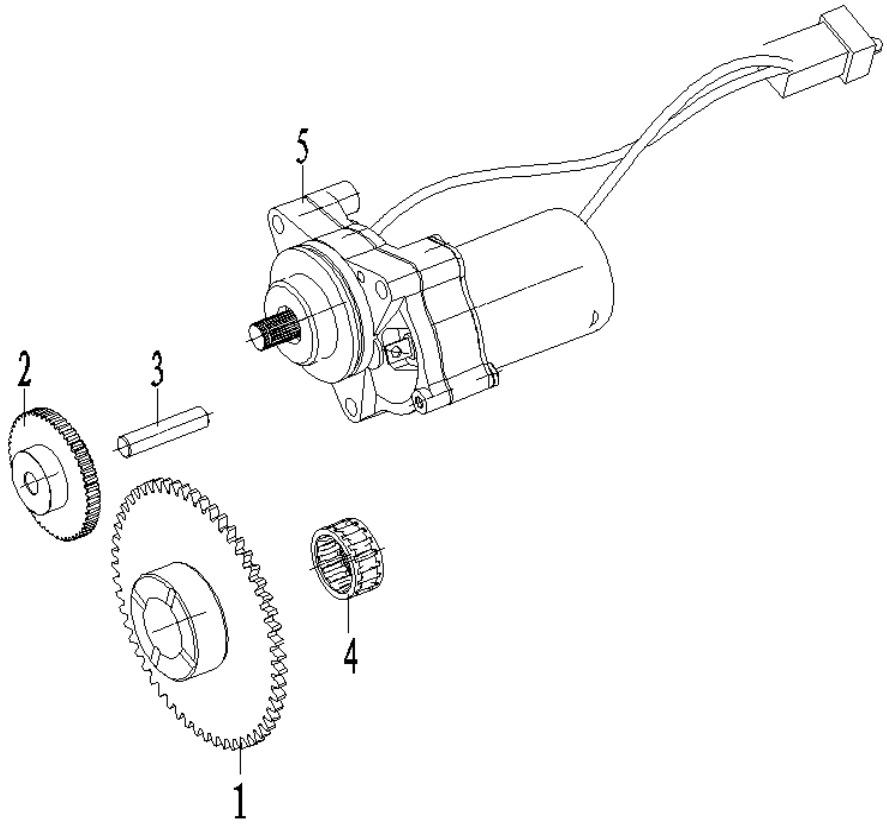

LAMP HEADLIGHT			RevisionNumberPage:03	
	NO	PART CODE	ENGLISH DESCRIPTION	QTY
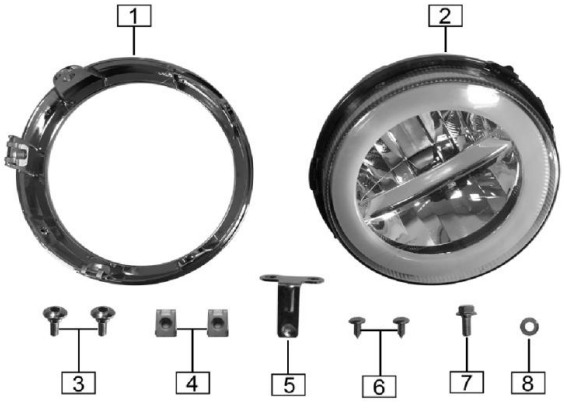	1	86105-H1L9-000001	Headlight lamp frame	1
	2	86100-H1L9-000001	Lamp,headlight	1
	3	9A139-1050-113Z00	Screw M5×13	2
	4	91218-1050-015T0U	Nut clip M5-15×11	2
	5	86110-H1L9-000001	Headlamp regulating bracket	1
	6	9A133-1042-010X1X	Screw ST4.2×10	2
	7	B057890005001071X	Bolt M5×10	1
	8	B0009701050000K1X	Washer 5	1
	9			
	10			
	11			
	12			
	13			
	14			

HEADLIGHT			RevisionNumberPage:04	
	NO	PART CODE	ENGLISH DESCRIPTION	QTY
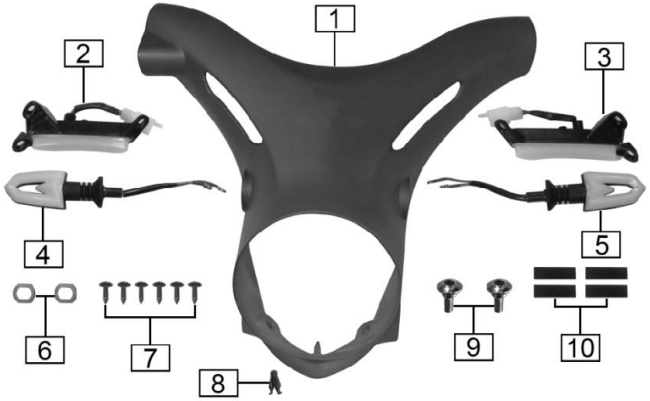	1	63501-H1L9-000007	Shell,headlight	1
	1	63501-H1L9-000001	Shell,headlight	1
	1	63501-H1L9-000005	Shell,headlight	1
	1	63501-H1L9-000003	Shell,headlight	1
	2	86811-H1L9-000001	Left Front Decorative Lamp	1
	3	86812-H1L9-000001	Right Front Decorative Lamp	1
	4	86300-H1L9-000001	Leftturninglamp,front	1
	5	86400-H1L9-000001	Rightturninglamp,front	1
	6	7222S-J0A2-00000H	Steering lamp positioning block	2
	7	9A133-1042-010X1X	Screw ST4.2×10	6
	8	63304-M154-000001	clip	1
	9	9A139-1050-113Z00	Screw M5×13	2
	10	08122-H1L9-010001	Damping foam	4
	11			
	12			
	13			
	14			
	15			

INSTRUMENT			RevisionNumberPage:05	
	NO	PART CODE	ENGLISH DESCRIPTION	QTY
	1	63505-H1L9-000007	Shell,instrument	1
	1	63505-H1L9-000001	Shell,instrument	1
	1	63505-H1L9-000005	Shell,instrument	1
	1	63505-H1L9-000003	Shell,instrument	1
	2	87100-H1L9-000001	Meterassembly	1
	3	63716-H1L9-000001	Decoration Cap,Instrument	1
	4	9A133-1042-013X1X	Screw ST4.2×13	3
	5	91218-1060-025T0U	Nut clip M6×25×15	2
	6	91218-1050-015T0U	Nut clip M5-15×11	2
	7	60003-I1F1-000001	Buckle	2
	8	9A139-1050-113Z00	Screw M5×13	2
	9	08122-H1L9-010001	Damping foam	2
	10			
	11			
	12			
	13			
	14			

TUBE,STEERING HANDLE BAR			RevisionNumberPage:06	
	NO	PART CODE	ENGLISH DESCRIPTION	QTY
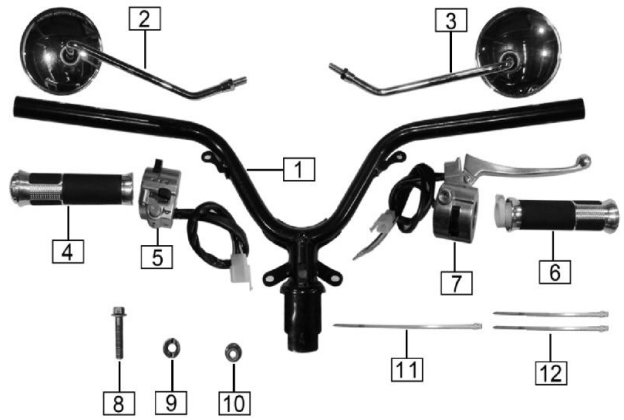	1	72100-H1L9-000001	Tube,steeringhandlebar	1
	2	69110-H1L9-000001	Leftrearviewmirror	1
	3	69120-H1L9-000001	Rightrearviewmirror	1
	4	72010-H418-000001	Rubberbush,lefthandlebar	1
	5	72201-H1L9-000007	Leftswitchassembly	1
	6	72020-H418-000001	Rubberbushassembly,righthandlebar(includinggreaser)	1
	7	72301-H1L9-000007	Rightbrakehandleseatassembly	1
	8	B057892010005071X	Bolt M10×1.25×50	1
	9	72118-0000-00001X	Locking bush,steering handlebar tube	1
	10	B061870210000061X	Nut M10×1.25	1
	11	08216-0000-2200	Belt L=250	1
	12	08216-0000-0700	Belt L=180	2
	13			
	14			
	15			
	16			
	17			
	18			

DIRECTIONA COLOUMN ASSEMBLY			RevisionNumberPage:07	
	NO	PART CODE	ENGLISH DESCRIPTION	QTY
	1	71105-H206-00001X	Adjusting nut,steering post	1
	2	71106-H206-00001X	Locknut,steering post	1
	3	71135-H206-00001X	Clip ring,steering rod	1
	4	7110A-H1L9-000001	Directional column assembly	1
	5	71201-G124-0000	Upper check ring,bearing	1
	6	71208-H418-0000	Upper seat ring,bearing	1
	7	71203-G124-0000	Lower seat ring,bearing	1
	8	71202-G124-0000	Lower check ring,bearing	1
	9	71209-H418-0000	Lower Retaining Bracket	1
	10	71204-G124-0000	Lowerseatring,bearing	1
	11	71124-H206-0000	RUBBER DUST PAD	1
	12	71123-H206-00001	WASHER Φ34.5	1
	13			
	14			
	15			
	16			
	17			
	18			
	19			
	20			

FRONT DAMPER			RevisionNumberPage:08	
	NO	PART CODE	ENGLISH DESCRIPTION	QTY
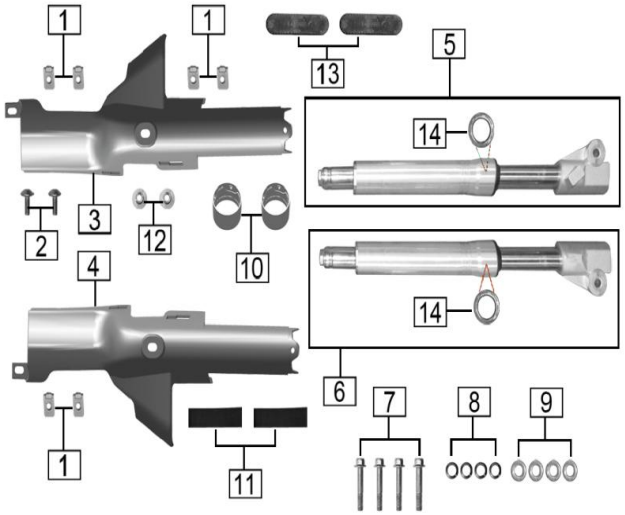	1	91218-1050-015T0U	Nut clip M5-15×11	6
	2	9A131-1050-01671X	Screw M5×16	2
	3	62211-H1L9-000007	Left decoration cap,front fork	1
	3	62211-H1L9-000001	Left decoration cap,front fork	1
	3	62211-H1L9-000005	Left decoration cap,front fork	1
	3	62211-H1L9-000003	Left decoration cap,front fork	1
	4	62212-H1L9-000007	Right decoration cap,front fork	1
	4	62212-H1L9-000001	Right decoration cap,front fork	1
	4	62212-H1L9-000005	Right decoration cap,front fork	1
	4	62212-H1L9-000003	Right decoration cap,front fork	1
	5	34100-H1L9-000001	Left front damper	1
	6	34200-H1L9-000001	Right front damper	1
	7	B057850010004571X	Bolt M10×1.25×45	4
	8	B000930010000001X	Spring washer φ10	4
	9	B0009701100000K1X	Washerφ10	4
	10	62230-H1L9-000001	Front fork decoration cover end cover	2
	11	08122-H1L9-000001	Buffer foam	2
	12	91302-9050-15041X	Flanged washer	2
	13	85850-J0A2-000002	Sidereflecter	2
	14	34107-H1L9-000001	Oil seal front damper	2
	15			
	16			

FRONT FENDER			RevisionNumberPage:09	
	NO	PART CODE	ENGLISH DESCRIPTION	QTY
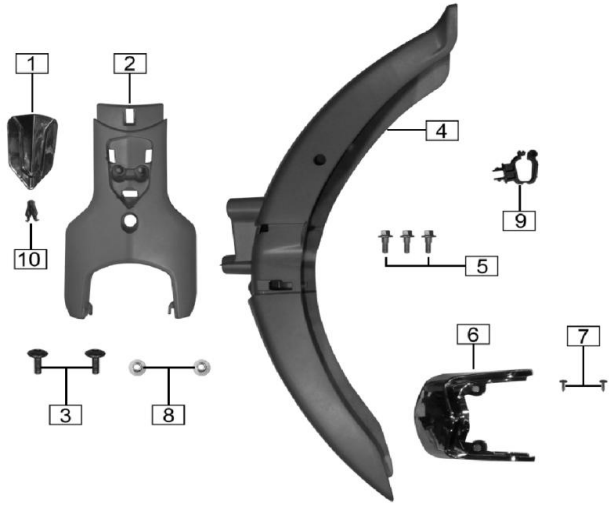	1	62307-H1L9-000001	Decoration Parts,Front Wind Cover	1
	2	62301-H1L9-000007	Front wind cover	1
	2	62301-H1L9-000001	Front wind cover	1
	2	62301-H1L9-000005	Front wind cover	1
	2	62301-H1L9-000003	Front wind cover	1
	3	9A131-1050-01671X	Screw M5×16	2
	4	63104-H1L9-000007	Front fender	1
	4	63104-H1L9-000001	Front fender	1
	4	63104-H1L9-000005	Front fender	1
	4	63104-H1L9-000003	Front fender	1
	5	91112-1060-01471X	Bolt M6×14	3
	6	63135-H1L9-000001	Decoration Parts,Front Fender	1
	7	9A133-1042-013X1X	Screw ST4.2×13	2
	8	91302-9050-15041X	Flanged washer	2
	9	63111-H418-0000	Wire protecting ring	1
	10	63304-M154-000001	clip	1
	11			
	12			
	13			

REAR FENDER			RevisionNumberPage:10	
	NO	PART CODE	ENGLISH DESCRIPTION	QTY
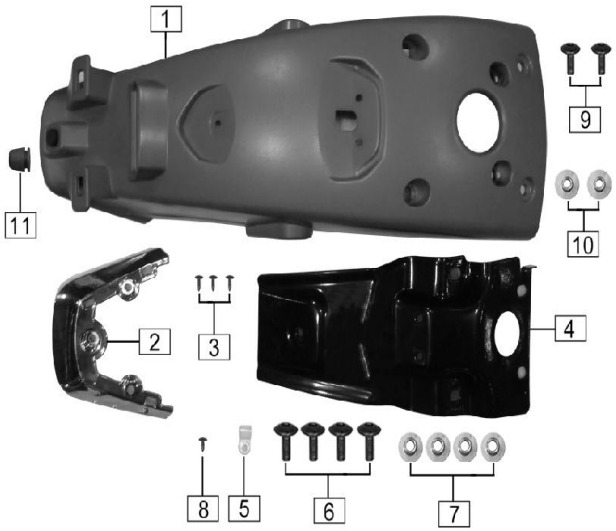	1	63203-H1L9-000007	Rear fender	1
	1	63203-H1L9-000001	Rear fender	1
	1	63203-H1L9-000005	Rear fender	1
	1	63203-H1L9-000003	Rear fender	1
	2	63204-H1L9-000001	Tail,Rear Fender	1
	3	9A133-1042-013X1X	Screw ST4.2×13	3
	4	63218-H1L9-000001	Bracket,Rear Fender	1
	5	87168-M288-0000	CABLE CLIP	1
	6	9A129-1060-01671X	Screw M6×16	3
	7	91302-9060-15061X	Flanged washerφ6×φ15×5.5-1.5	4
	8	9A133-1042-010X1X	Screw ST4.2×10	1
	9	9A131-1050-01671X	Screw M5×16	4
	10	91302-9050-15041X	Flanged washerφ5×φ15×3.5-1.5	2
	11	90276-M567-0300	Buffer pad,Rear licence	1
	12			
	13			
	14			
	15			
	16			

TAIL LIGHT			RevisionNumberPage:11	
	NO	PART CODE	ENGLISH DESCRIPTION	QTY
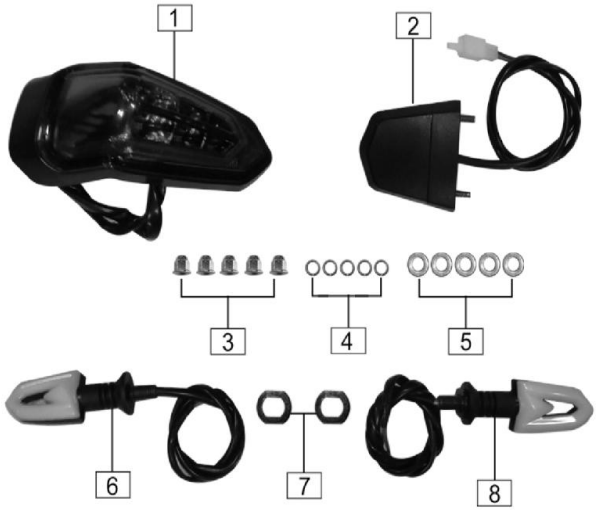	1	86200-H1L9-000001	Rearlampassembly	1
	2	86700-H1L9-000001	Rear licence plate lamp	1
	3	B009230005000031X	Cap nut M5	5
	4	B000930005000001X	Spring washer 5	5
	5	B0009701050000K1X	Washer 5	5
	6	86500-H1L9-000001	Left turning lamp, rear	1
	7	7222S-J0A2-00000H	Steering lamp positioning block	2
	8	86600-H1L9-000001	Right turning lamp, rear	1
	9			
	10			
	11			
	12			
	13			
	14			
	15			
	16			
	17			
	18			
	19			
	20			

REAR FENDER			RevisionNumberPage:12	
	NO	PART CODE	ENGLISH DESCRIPTION	QTY
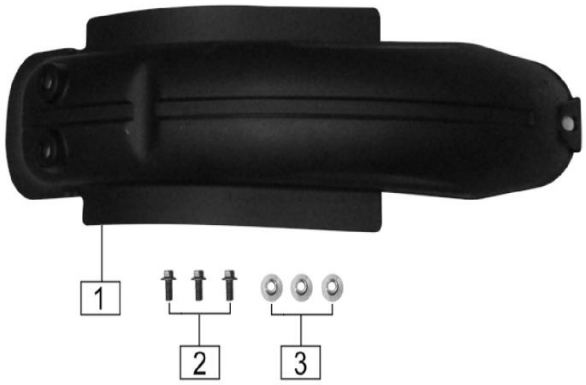	1	63201-H1L9-000001	Rear fender front	1
	2	B166740106001671X	Bolt M6×16	3
	3	91302-9060-15041X	Flanged washerφ6×φ15×3.5-1.5	3
	4			
	5			
	6			
	7			
	8			
	9			
	10			
	11			
	12			
	13			
	14			
	15			
	16			

CONTROLLING CABLE			RevisionNumberPage:13	
	NO	PART CODE	ENGLISH DESCRIPTION	QTY
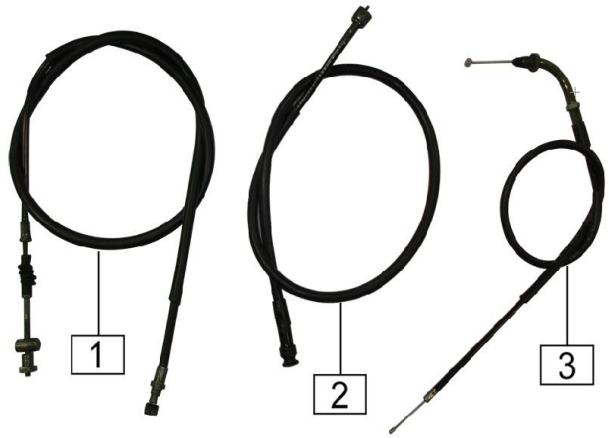	1	72500AZZ06710401C	Cable,frontbrake	1
	2	87300AZZ02008601C	Cable,odometer	1
	3	72400DWZ08405701C	Cable,throttle	1
	4			
	5			
	6			
	7			
	8			
	9			
	10			
	11			
	12			
	13			
	14			
	15			
	16			

FRONT BRAKE			RevisionNumberPage:14	
	NO	PART CODE	ENGLISH DESCRIPTION	QTY
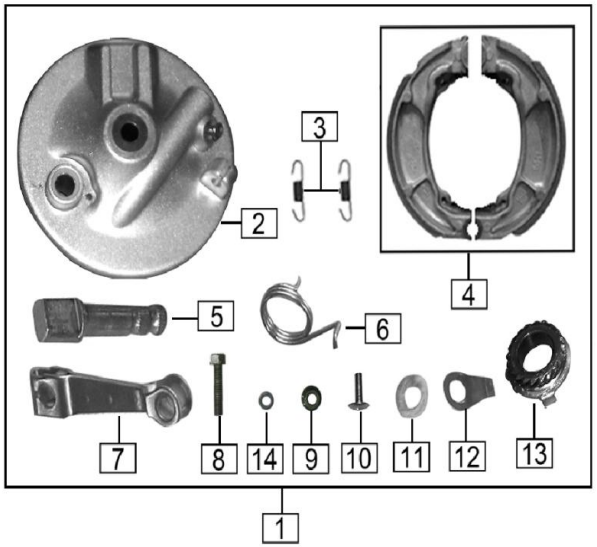	1	54100-H206-000092	Frontbrake	1
	2	54140-H206-000090	Cover,frontbrake	1
	3	54104-H206-0000	Pullspring,frontbrake	2
	4	54150-H206-000001	Blockgroupware,frontbrake	1
	5	54112-H206-000001	Cam,Front Brake	1
	6	54107-H206-000001	Returning Spring,Front Brake	1
	7	54115-H206-000001	Pull Arm,Front Brake	1
	8	B057820006002571X	Bolt M6×25	1
	9	B061770106000061X	Nut M6	1
	10	B008200005001521X	Screw M5×15	1
	11	54141-H206-0000	Felt,Front Brake	1
	12	54121-H206-000001	Indicating Board, Front Brake	1
	13	54168-H206-0000	Speedometer Gear Shaft,Front Brak	1
	14	B0009701060000K1X	Washer 6	1
	15			
	16			
	17			
	18			

FRONT WHELL WITH SPOKE			RevisionNumberPage:15
	NO	PART CODE	ENGLISH DESCRIPTION	QTY
	1	51189-0000-000072	Shoe,front wheel	1
	2	51205-0000-0000	Padbelt,front wheel	1
	3	51188-0000-000244	Innertube,front wheel	1
	4	51110-H1L9-000001	Front whell	1
	5	51102-H259-02001X	Right bush,front wheelφ10×φ20×24.5	1
	6	B061870210000061X	Nut M10×1.25	1
	7	94005-0000-020002	Axle,front wheel M10×1.25×191	1
	8	51116-0000-2400	Oilseal,hub(20×35×7/11)	1
	9	92102-000063002RS	Bearing6300-2RS	2
	10			
	11			
	12			
	13			
	14			
	15			
	16			
	17			
	18			
	19			

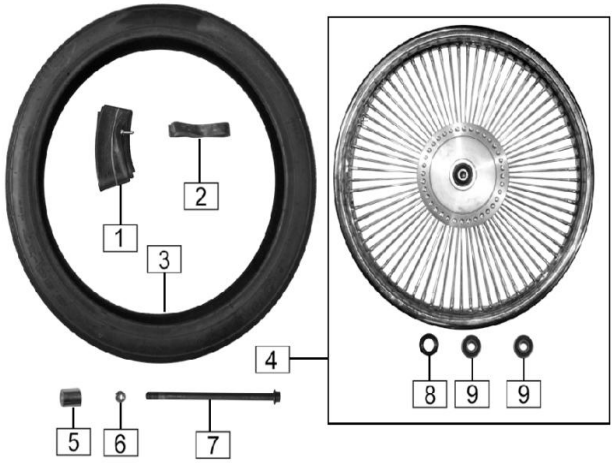

REAR WHEEL WITH SPOKE			RevisionNumberPage:16	
	NO	PART CODE	ENGLISH DESCRIPTION	QTY
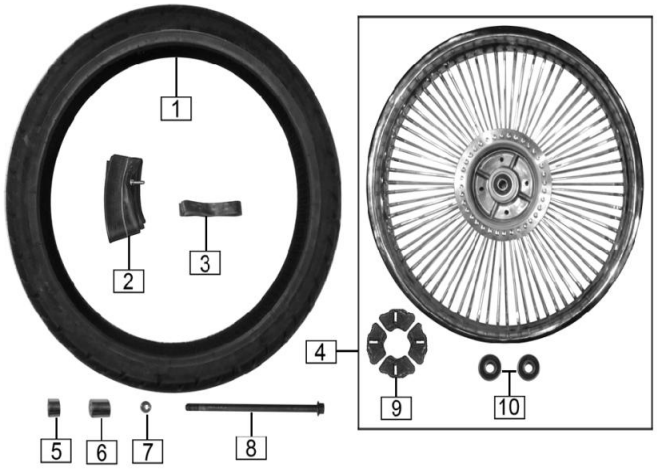	1	51288-0000-000306	Shoe,rear wheel	1
	2	51289-0000-000079	Innertube,rear wheel	1
	3	51205-0000-0000	Padbelt,rear wheel	1
	4	51210-H1L9-000001	Rear wheel	1
	5	51201-G129-C0001X	Leftbush,rear wheel	1
	6	51202-G134-00001X	Rightbush,rear wheel	1
	7	B061870212000061X	Nut M12×1.25	1
	8	94005-0000-040002	Axle(M12×1.25×240),Rearwheel	1
	9	51218-0000-2800	Bufferblock,rear wheel	1
	10	92102-000063012RS	Bearing6301-2RS	2
	11			
	12			
	13			
	14			
	15			
	16			
	17			
	18			

REAR BRAKE			RevisionNumberPage:17	
	NO	PART CODE	ENGLISH DESCRIPTION	QTY
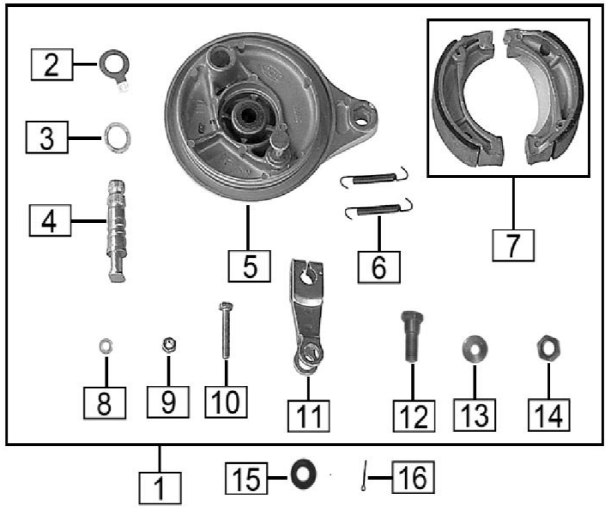	1	54200-H206-000090	Rearbrake	1
	2	54208-H206-000001	Indicatingboard,rearbrake	1
	3	54141-H206-0000	Felt,frontbrake	1
	4	54209-H206-000001	Cam,rearbrake	1
	5	54205-H206-000091	Cap,rearbrake	1
	6	54201-H206-0000	Padspring,rearbrake	2
	7	54220-H206-020000	Pad,rearbrake	1
	8	B0009701060000K1X	Washer 6	1
	9	B061770106000061X	Nut M6	1
	10	B057820006003571X	Bolt M6×35	1
	11	54207-H206-000001	Pullingarm,rearbrake	1
	12	54212-I219-000001	Bolt,rearbrakepullarm	1
	13	B0009701080000K1X	Washer 8	1
	14	B061770108000061X	Nut M8	1
	15	9131B-0000-0300	rubber plane pad	1
	16	B000910002002001X	Cotterpinφ2×20	1
	17			
	18			
	19			

BUFFER ASSEMBLY			RevisionNumberPage:18
	NO	PART CODE	ENGLISH DESCRIPTION	QTY
	1	55000-H990-C10002	Bufferassembly	1
	2	55005-0000-0900	Oilseal26×40×6.5/11,buffer	1
	3	92102-000062032RS	Bearing 6203-2RS	1
	4	55002-H206-000001	Sprocketwheel	1
	5	55001-H990-1000	Buffer single	1
	6	B057820008003671C	Bolt M8×36	4
	7	B061700008000061C	Nut M8	4
	8	55007-H206-000001	Lock plate	2
	9	55015-H990-100001	Inner bush,sprocket wheel	1
	10			
	11			
	12			
	13			
	14			
	15			
	16			
	17			
	18			
	19			
	20			

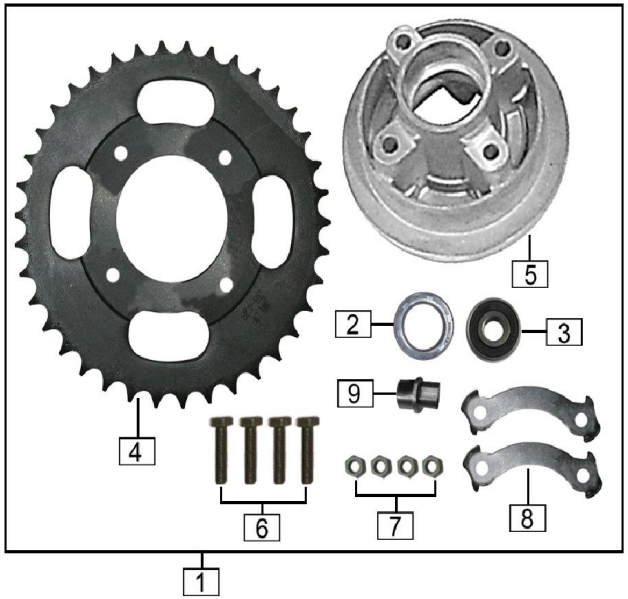

MUFFLER			RevisionNumberPage:19	
	NO	PART CODE	ENGLISH DESCRIPTION	QTY
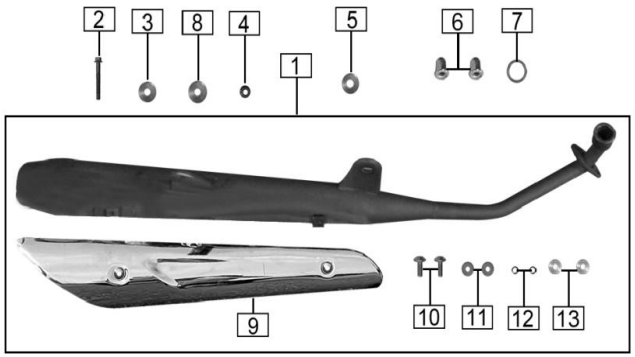	1	18000-H1L9-010001	Sign,muffle	1
	2	B057890008005071X	Bolt M8×50	1
	3	91301-0080-225K1X	Washer φ8×φ25×2	1
	4	B061770108000061X	Nut M8	1
	5	91301-0120-424K1X	Washerφ12×φ24×4	1
	6	91202-1080-01830G	Long cap nut M8×17.5	2
	7	18030-H206-0000	Sealpad,exhaustmuffler	1
	8	91301-0080-228K1X	Washer φ8×φ28×2	1
	9	18040-H1L9-000001	Cover,exhaust muffler	1
	10	9A145-1060-016Z00	Screw M6×16	2
	11	B0009601060000Z00	Washer 6	2
	12	B0009300060000Z00	Spring washer	2
	13	18007-J0E6-0000	Exhaust muffler insulation pad	2
	14	18050-H1L9-000002	Rubber cover exhaust muffler	1
	15			

CARBURATOR			RevisionNumberPage:20	
	NO	PART CODE	ENGLISH DESCRIPTION	QTY
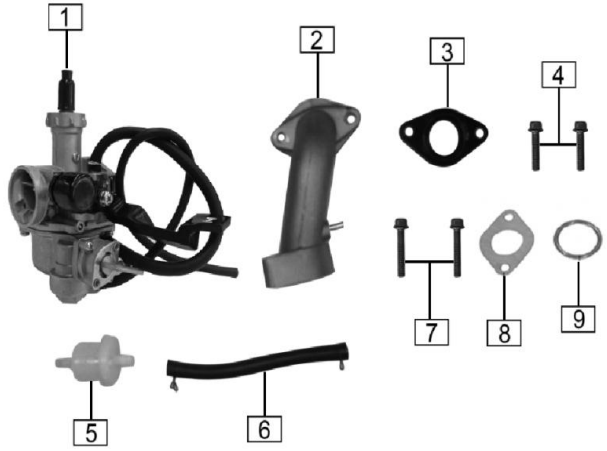	1	17100-0000-630003	Carburetor	1
	2	15800-H0E5-0000	Intakepipe	1
	3	15810-H206-0000	Sealpad,intakepipe	1
	4	B166740106002571G	Bolt M6×25	2
	5	61180-0000-0500	Fuel filter	1
	6	613170070ZGT00000	Tubing assembly	1
	7	B166740106003071G	Bolt M6×30	2
	8	15801-H206-0000	Asbestos pad,intake pipe	1
	9	15834-H206-0000	Seal pad, intake pipe	1
	10			
	11			
	12			
	13			
	14			
	15			
	16			

AIR CLEANER			RevisionNumberPage:21	
	NO	PART CODE	ENGLISH DESCRIPTION	QTY
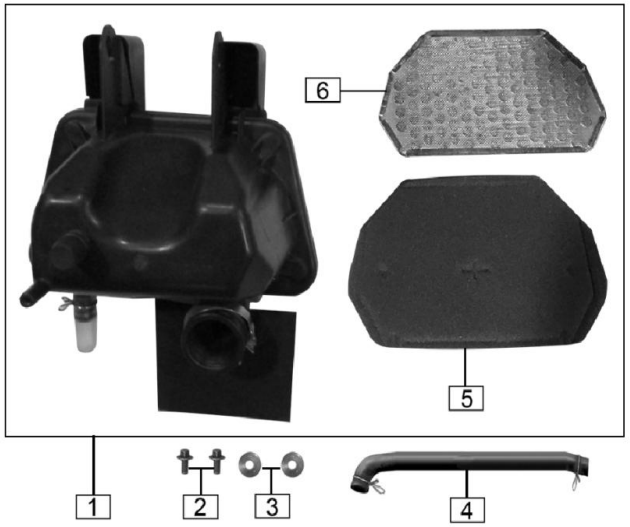	1	16100-H0S4-C10003	Aircleaner	1
	2	B166740106001271X	Bolt M6×12	2
	3	91302-9060-15041X	Flanged washerφ6×φ15×3.5-1.5	2
	4	61320-0000-0300	Tubing assembly	1
	5	16101-H0S4-C000	Filterelement	1
	6	16114-H0S4-C000	Filtering net,air cleaner	1
	7			
	8			
	9			
	10			
	11			
	12			
	13			
	14			
	15			
	16			
	17			
	18			
	19			

SEAT			RevisionNumberPage:22	
	NO	PART CODE	ENGLISH DESCRIPTION	QTY
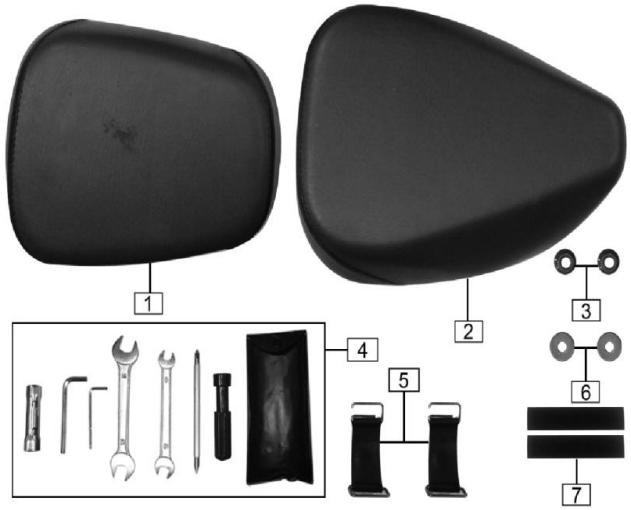	1	41300-H1L9-000010	Attach the seat cushion	1
	2	41200-H1L9-000002	Singel seat	1
	3	B061770106000061X	Nut M6	2
	4	06000-H1L9-000001	Vehicle tools	1
	5	31250-I357-0000	Tool box band	2
	6	B0009601060000K1X	Washer 6	2
	7	08122-H1L9-020001	Buffer foam	2
	8			
	9			
	10			
	11			
	12			
	13			
	14			
	15			
	16			
	17			
	18			

ELECTRIC PARTS			RevisionNumberPage:23	
	NO	PART CODE	ENGLISH DESCRIPTION	QTY
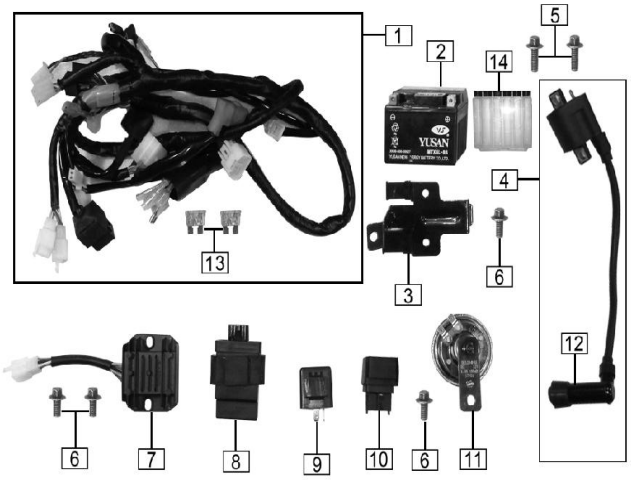	1	85100-H1L9-000001	Maincable	1
	2	83200-C000-3300	Battery	1
	3	83234-H1L9-000001	Battery bracket baffle	1
	4	81100-H0E5-0000	Ignitioncoil/highvoltagebag	1
	5	B166740106001671X	Bolt M6×16	2
	6	B166740106001271X	Bolt M6×12	4
	7	83100-H259-C00001	Rectifier	1
	8	81200-H0E5-0000	Ignitor/ignitorassembly	1
	9	85600-I126-C10001	Flasher	1
	10	82290-H0P8-0000	Startingrelay	1
	11	85500-G124-C000	Horn	1
	12	81110-H0E5-000000	Spark plug cap	1
	13	85174-0000-0400	The insurance sheet	2
	14	83230-0000-2200	Electrolyte	1
	15			
	16			
	17			
	18			

FRAME			RevisionNumberPage:24	
	NO	PART CODE	ENGLISH DESCRIPTION	QTY
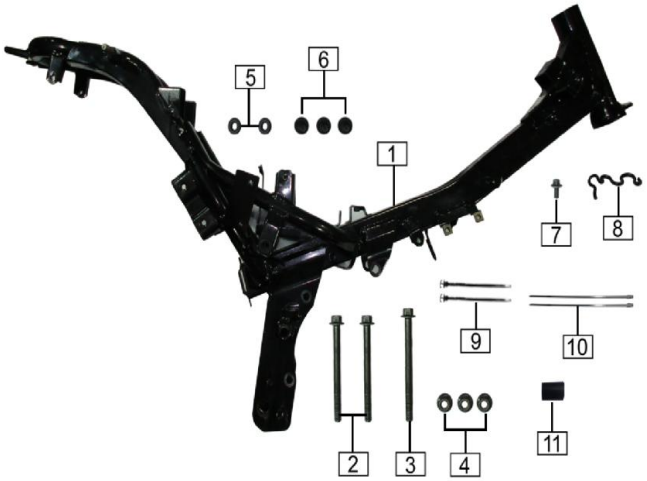	1	31100-H1L9-000005	Frame	1
	2	B0578920100105T1X	Bolt M10×105	2
	3	B0578920100113T1X	Bolt M10×113	1
	4	B061870210000061X	Nut M10×1.25	3
	5	63346-I126-0400	Side cover rubber ring	2
	6	83209-I219-0000	Battery rubber cushion	3
	7	B166740106001271X	Bolt M6×12	1
	8	85107-H1L9-000001	Main cable right thread hook	1
	9	08216-0000-4000	Tie belt	2
	10	08216-0000-0700	Tie belt	2
	11	61003-0000-000002	Cushioning Bush	1
	12			
	13			
	14			
	13			
	14			
	15			
	16			

REAR FORK			RevisionNumberPage:25	
	NO	PART CODE	ENGLISH DESCRIPTION	QTY
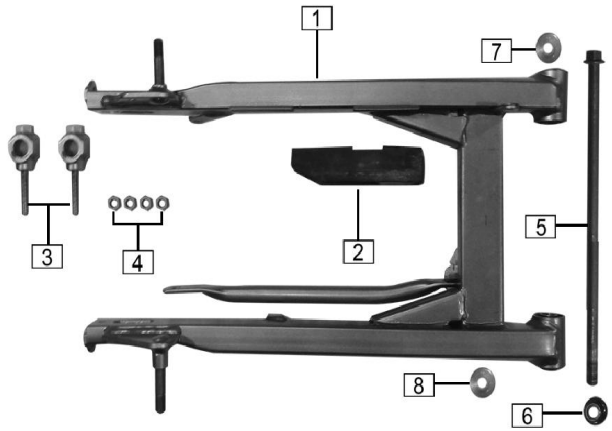	1	35200-H1L9-000001	Forkassembly	1
	2	35001-H892-0000	Protectingclip,chain	1
	3	35010-J0X1-000004	Adjuster,chain	2
	4	B061700008000061X	Nut M8	4
	5	94005-0000-040001	Shaft,fork(M12×273)	1
	6	B061870212000061X	Nut M12×1.25	1
	7	91301-0120-228K1X	Washerφ12×φ28×2	1
	8	91301-0120-424K1X	Washerφ12×φ24×4	1
	9			
	10			
	11			
	12			
	13			
	14			
	15			
	16			
	17			
	18			

REAR SHOCK ABSORBER			RevisionNumberPage:26	
	NO	PART CODE	ENGLISH DESCRIPTION	QTY
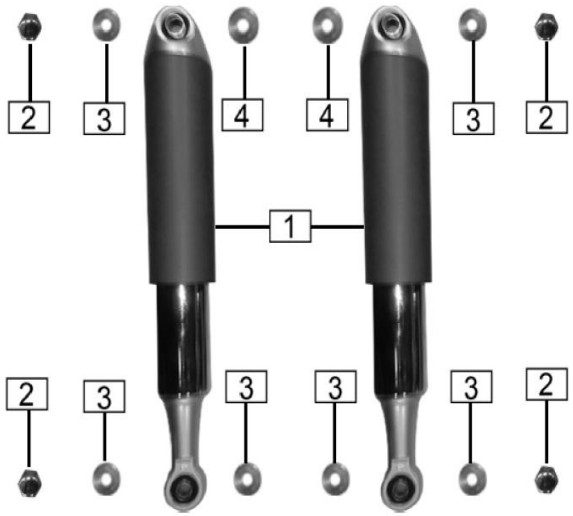	1	33300-H1L9-000009	Rear shock absorber	2
	1	33300-H1L9-000001	Rear shock absorber	2
	1	33300-H1L9-000005	Rear shock absorber	2
	1	33300-H1L9-000003	Rear shock absorber	2
	2	B009232010000031X	Nut M10×1.25	4
	3	91301-0100-225K1X	Washerφ10×φ25×2	6
	4	91301-0120-228K1X	Washerφ12×φ28×2	2
	5			
	6			
	7			
	8			
	9			
	10			
	11			
	12			
	13			
	14			
	15			

WHOLE CHAIN CASE/CHAIN			RevisionNumberPage:27	
	NO	PART CODE	ENGLISH DESCRIPTION	QTY
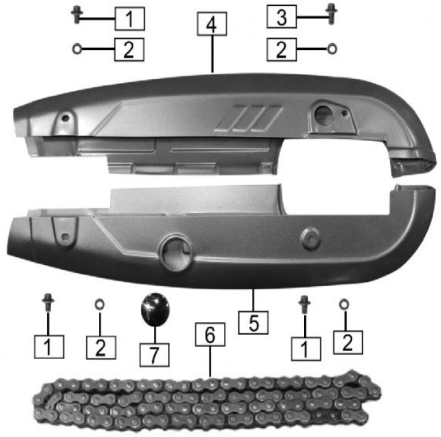	1	B166740106000871X	Bolt M6×8	3
	2	B0009701060000K1X	Washer 6	4
	3	B166740106001271X	Bolt M6×12	1
	4	35130-H206-02007S	Upper chain box	1
	5	35120-H206-00007S	Lower chain box	1
	6	26400-428H-0100	Chain(428h×100)	1
	7	35121-H0D3-00000G	Viewholecover	1
	8			
	9			
	10			
	11			
	12			
	13			
	14			
	15			
	16			

FRONT FOOT PEGASSEMBLY			RevisionNumberPage:28	
	NO	PART CODE	ENGLISH DESCRIPTION	QTY
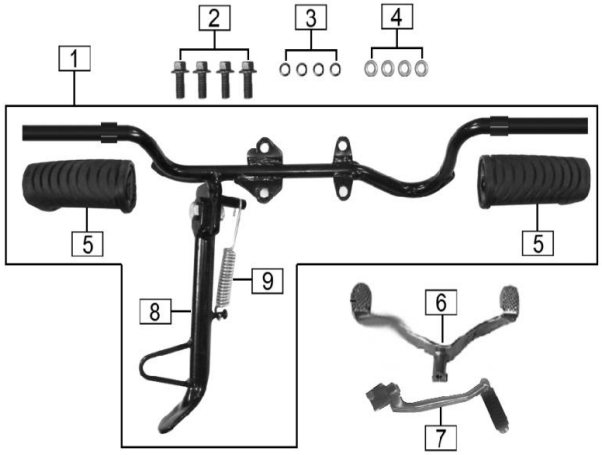	1	32100-H0E5-010002	Frontfootpegassembly	1
	2	B057890008002071X	Bolt M8×20	4
	3	B000930008000001X	Spring washer 8	4
	4	B0009701080000K1X	Washer 8	4
	5	32101-H0E5-0100	Rubberbush,frontfootpeg	2
	6	24400-H0E5-020002	Gearshiftfootpeg	1
	7	21200-H1S3-000001	Startingarm	1
	8	32130-H259-00006N	Sidestand	1
	9	32102-H206-000001	Outerspring	1
	10			
	11			
	12			
	13			
	14			
	15			
	16			
	17			

FUEL TANK			RevisionNumberPage:29	
	NO	PART CODE	ENGLISH DESCRIPTION	QTY
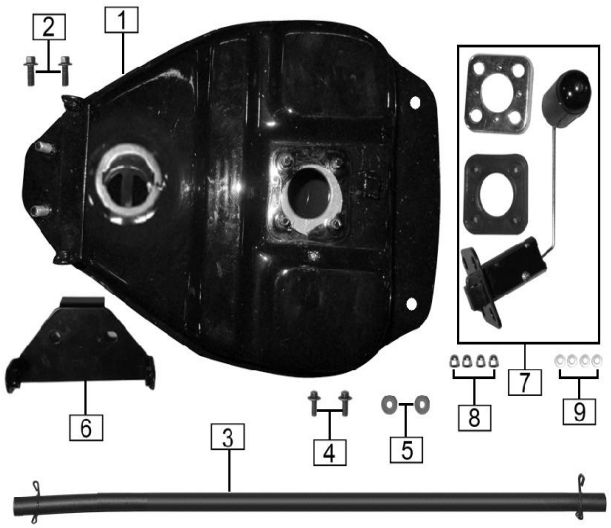	1	61100-H1L9-000001	Fuel tank	1
	2	B057890008001671X	Bolt M6×16	2
	3	613170460ZGT00000	Compoundoilpipe(φ4×φ8×460)	1
	4	B166740106001271X	Bolt M6×12	2
	5	B0009601060000K1X	Washer 6	2
	6	63344-H1L9-000001	Body cover bracket	1
	7	87200-H1L9-000001	Fuelsnesor	1
	8	B009230005000031X	Nut M5	4
	9	B0009601050000K1X	Washer 5	4
	10			
	11			
	12			
	13			
	14			
	15			
	16			
	17			
	18			

MAIN BRACKET/REAR BRAKING LEVER			RevisionNumberPage:30	
	NO	PART CODE	ENGLISH DESCRIPTION	QTY
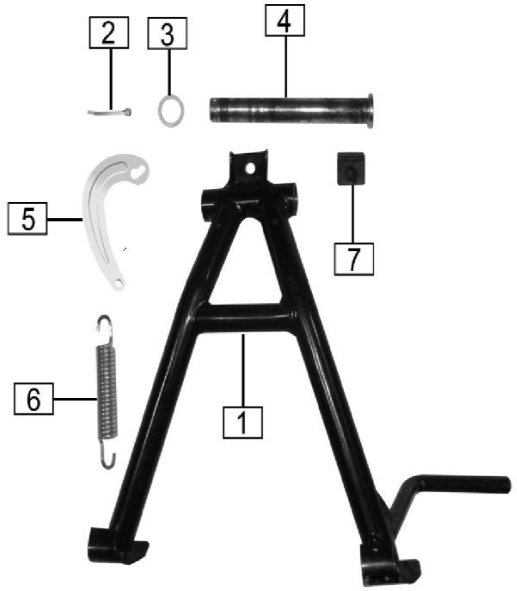	1	32200-H1L9-000001	Mainbracket	1
	2	B000910003003001X	Opening pinφ3×30	1
	3	91301-0170-223K1X	Washerφ17×φ23×1.5	1
	4	32281-H990-C0001X	Shaft,mainbracket	1
	5	32203-H1L9-000001	Hook,mainbracket	1
	6	94001-0000-020002	Spring,mainbracket	1
	7	32204-I126-0200	Dampingpad,mainbracket	1
	8			
	9			
	10			
	11			
	12			
	13			
	14			
	15			
	16			
	17			
	18			
	19			

MAIN BRACKET/REAR BRAKING LEVER			RevisionNumberPage:31	
	NO	PART CODE	ENGLISH DESCRIPTION	QTY
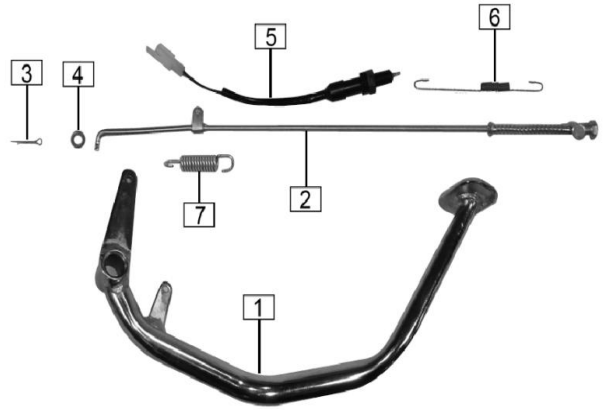	1	52100-H1L9-000001	Rearbrakinglever	1
	2	52200-H1L9-000001	Pullrod,rearbrake	1
	3	B000910002002001X	Openingpinφ2×20	1
	4	B0009701060000K1X	Washer 6	1
	5	84600-H136-0000	Switch, rear braking lamp	1
	6	84602-H281-00001X	Switchspring,rearbrakinglamp	1
	7	52201-I225-02001X	ETurningspring,rearbraker	1
	8			
	9			
	10			
	11			
	12			
	13			
	14			
	15			

FRONT CARRIER			RevisionNumberPage:32	
	NO	PART CODE	ENGLISH DESCRIPTION	QTY
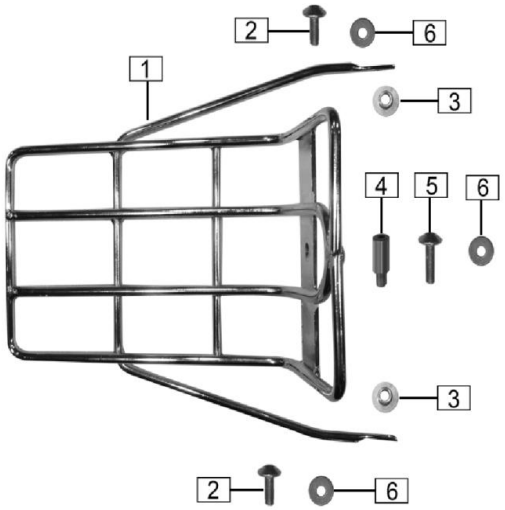	1	42110-H1L9-000001	Front carrier	1
	2	9A118-1060-020Z00	Screw M6×20	2
	3	91302-9060-15041X	Flanged washerφ6×φ15×3.5-1.5	2
	4	94006-0000-110001	Front carrier pipe	1
	5	9A118-1060-038Z00	Screw M6×38	1
	6	B0009701060000K1X	Washer 6	3
	7			
	8			
	9			
	10			
	11			
	12			
	13			
	14			
	15			
	16			
	17			
	18			
	19			

FRONT COVER			RevisionNumberPage:33	
	NO	PART CODE	ENGLISH DESCRIPTION	QTY
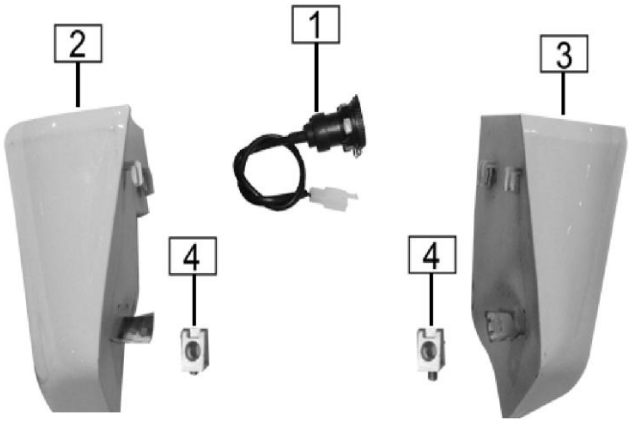	1	82400-0000-020002	USB plug	1
	2	63710-H1L9-000001	tool box -L	1
	3	63710-H1L9-010001	tool box -R	1
	4	91218-1050-015T0U	Clip M5-15×11	2
	5			
	6			
	7			
	8			
	9			
	10			
	11			
	12			
	13			
	14			
	15			
	16			
	17			

WIND BOARD			RevisionNumberPage:34	
	NO	PART CODE	ENGLISH DESCRIPTION	QTY
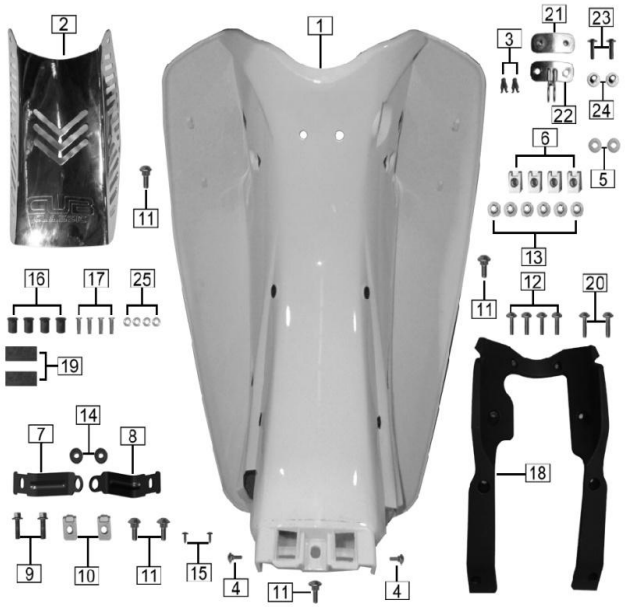	1	63400-H1L9-000003	Windboard	1
	2	63402-H1L9-000003	Decorative cover	1
	3	63304-M154-000001	Clip	2
	4	9A139-1050-113Z00	Screw M5×13	2
	5	6222D-0000-1200	H shape rubber pad	2
	6	91218-1050-015T0U	Clip M5-15×11	4
	7	63423-H1L9-000001	left brakcet,wind board	1
	8	63424-H1L9-000001	Right brakcet,wind board	1
	9	B166740106002571G	Bolt M6×25	2
	10	91218-1060-025T0U	Clip M6×25×15	2
	11	9A139-1060-716Z00	Screw M6×16	5
	12	9A131-1050-01671X	Screw M5×16	4
	13	91302-9050-15041X	Flanged washer	6
	14	6222D-0000-1200	H shape rubber pad	2
	15	9A133-1042-013X1X	Screw ST4.2×13	2
	16	93010-0000-0500	Nut M5	4
	17	9A150-1050-014Z00	Screw M5×14	4
	18	63451-H1L9-000001	Windshield connection	1
	19	8320A-I0E4-0000	Damping foam	2
	20	9A113-1050-02071X	Screws M5×20	2
	21	63407-H1L9-000001	Helmet hook,Wind Board	1
	22	6340M-H1L9-000001	Pressure Plate,Wind Board Hook	1
	23	9A118-1060-020Z00	Screws	2
	24	91302-9060-18071X	Flangedwashe	2
	25	91311-M288-0100	Rubber plane pad	4

TAIL CAP/PROTECTING BOARD, CENTRAL			RevisionNumberPage:35	
	NO	PART CODE	ENGLISH DESCRIPTION	QTY
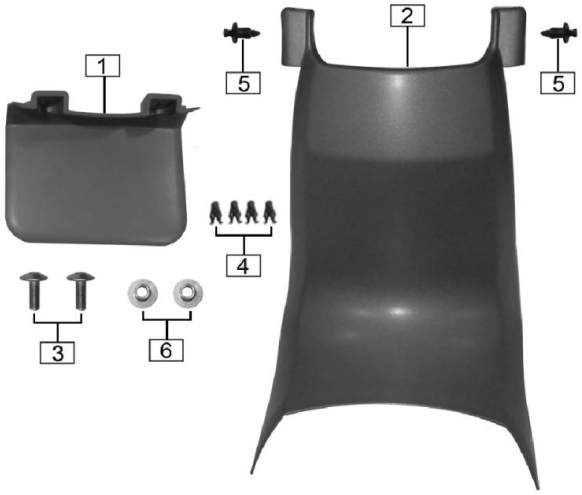	1	63602-H1L9-000007	Tail cap	1
	1	63602-H1L9-000001	Tail cap	1
	1	63602-H1L9-000005	Tail cap	1
	1	63602-H1L9-000003	Tail cap	1
	2	62201-H1L9-000007	Protecting board,central	1
	2	62201-H1L9-000001	Protecting board,central	1
	2	62201-H1L9-000005	Protecting board,central	1
	2	62201-H1L9-000003	Protecting board,central	1
	3	9A131-1050-01671X	Screw M5×16	2
	4	63304-M154-000001	Clip	4
	5	60003-I1F1-000001	Buckle	2
	6	91302-9050-15041X	Flanged washerφ5×φ15×3.5-1.5	2
	7			
	8			
	9			
	10			
	11			
	12			
	13			
	14			

LEFT BODY			RevisionNumberPage:36	
	NO	PART CODE	ENGLISH DESCRIPTION	QTY
	1	63341-H1L9-000007	Cap, vehicle left part	1
	1	63341-H1L9-000001	Cap, vehicle left part	1
	1	63341-H1L9-000005	Cap, vehicle left part	1
	1	63341-H1L9-000003	Cap, vehicle left part	1
	2	63335-H1L9-000001	Decorating block	1
	3	63301-H1L9-000007	Left side cap	1
	3	63301-H1L9-000001	Left side cap	1
	3	63301-H1L9-000005	Left side cap	1
	3	63301-H1L9-000003	Left side cap	1
	4	9A133-1042-010X1X	Screw ST4.2×10	3
	5	91218-1050-015T0U	Clip M5-15×11	4
	6	9A129-1060-01671X	Screw M6×16	3
	7	91302-9060-15041X	Flanged washerφ6×φ15×3.5-1.5	3
	8	9A131-1050-01671X	Screw M5×16	1
	9	91302-9050-15041X	Flanged washerφ5×φ15×3.5-1.5	1
	10	08122-H1L9-010001	Damping foam	2
	11			
	12			

RIGHT BODY			RevisionNumberPage:37	
	NO	PART CODE	ENGLISH DESCRIPTION	QTY
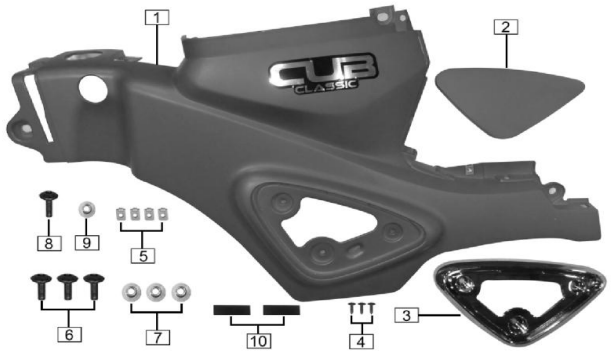	1	63352-H1L9-000007	Cap, vehicle right part	1
	1	63352-H1L9-000001	Cap, vehicle right part	1
	1	63352-H1L9-000005	Cap, vehicle right part	1
	1	63352-H1L9-000003	Cap, vehicle right part	1
	2	63332-H1L9-000007	Right side cap	1
	2	63332-H1L9-000001	Right side cap	1
	2	63332-H1L9-000005	Right side cap	1
	2	63332-H1L9-000003	Right side cap	1
	3	63337-H1L9-000001	Decorating block	1
	4	9A133-1042-010X1X	Screw ST4.2×10	3
	5	91218-1050-015T0U	Clip M5-15×11	4
	6	9A129-1060-01671X	Screw M6×16	3
	7	91302-9060-15041X	Flanged washerφ6×φ15×3.5-1.5	3
	8	9A131-1050-01671X	Screw M5×16	1
	9	91302-9050-15041X	Flanged washerφ5×φ15×3.5-1.5	1
	10	08122-H1L9-010001	Damping foam	2
	11			
	12			

BOARD,REAR SEAT			RevisionNumberPage:38	
	NO	PART CODE	ENGLISH DESCRIPTION	QTY
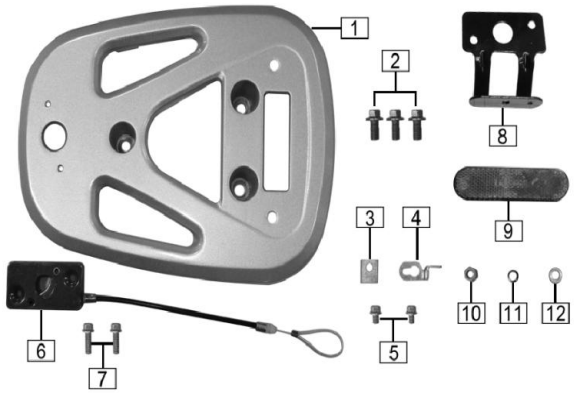	1	41106-H1L9-000001	Backseat plate	1
	2	B057890008001671X	Bolt M8×16	3
	3	41465-H1L9-000001	Positioning plate	1
	4	41466-H1L9-000001	Limit plate	1
	5	B166740106000871X	Screw M6×8	2
	6	41490-H870-C00001	Lock seat,seat	1
	7	B166740106002271X	Bolt M6×22	2
	8	85831-H1L9-000001	Bracket,Rear Reflecter	1
	9	85830-P1D2-0000	Reflecter,rear	1
	10	B061700006000061X	Nut	1
	11	B000930006000001X	Spring washer	1
	12	B0009701060000K1X	Plane washer	1
	13			
	14			
	15			
	16			
	17			
	18			

VEHICLE LOCK/vehicle tool			RevisionNumberPage:39	
	NO	PART CODE	ENGLISH DESCRIPTION	QTY
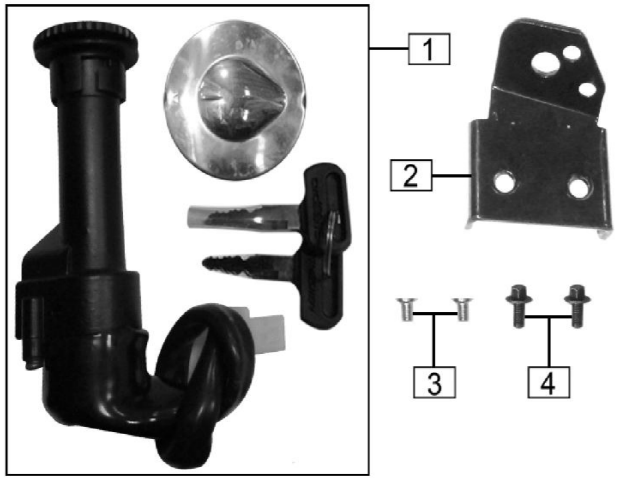	1	07002-H1L9-000007	Vehiclelock	1
	2	84203-H1L9-000001	Mounting bracket	1
	3	B008190006001221X	Screw M6×12	2
	4	B166740106001271X	Bolt M6×12	2
	5			
	6			
	7			
	8			
	9			
	10			
	11			
	12			
	13			
	14			
	15			
	16			
	17			

REAR FOOT PEGASSEMBLY			RevisionNumberPage:40	
	NO	PART CODE	ENGLISH DESCRIPTION	QTY
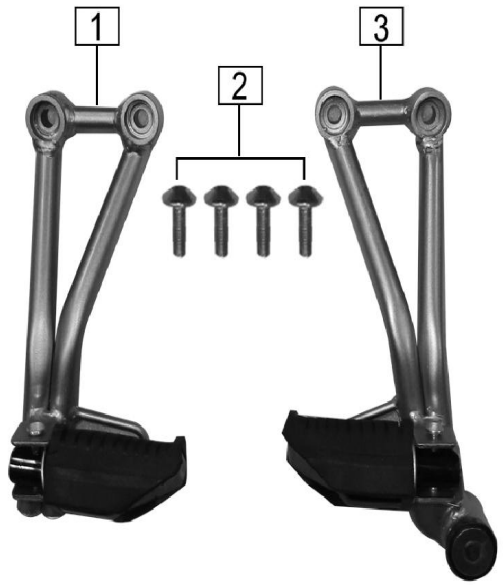	1	32410-H1L9-000001	Left rear footpeg assembly	1
	2	32420-H1L9-000001	Right rear footpeg assembly	1
	3	9A123-1080-02571X	Screw M8×25	4
	4			
	5			
	6			
	7			
	8			
	9			
	10			
	11			
	12			
	13			
	14			
	15			
	16			
	17			
	18			
	19			

AIR PUMP

RevisionNumberPage:41

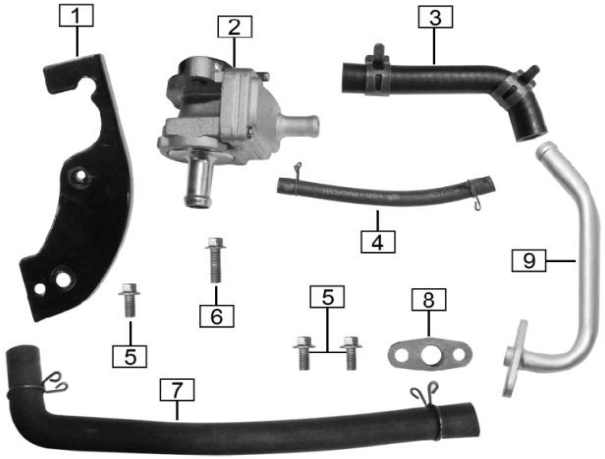

NO	PART CODE	ENGLISH DESCRIPTION	QTY
1	3115T-H0E5-010001	Bracket,airpump	1
2	18090-H336-0000	Airpump	1
3	18092-0000-A001	Exhaust rubber pipe	1
4	613140100ZGT00000	Oil Pipe	1
5	B166740106001271G	Bolt M6×12	3
6	B166740106002071X	Bolt M6×20	1
7	18099-0000-4400	Rubber pipe	1
8	90268-DA80-0000	Sealpad	1
9	1809B-H0E5-010001	Circularsteelpipe	1
10			
11			
12			
13			
14			
15			
16			
17			
18			

LABEL			RevisionNumberPage:42	
	NO	PART CODE	ENGLISH DESCRIPTION	QTY
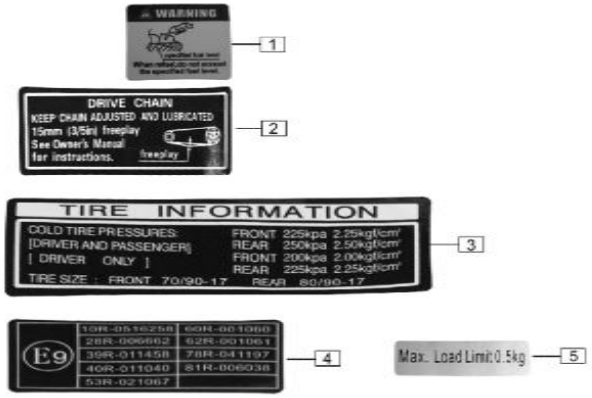	1	630GW-0000-000001	Fuel warning label	1
	2	35111-0000-C000	Drive chain sign	1
	3	35112-0000-000002	Tyre pressure sign	1
	4	630MJ-H1L9-000001	Certificate sticker	1
	5	63013-H1L9-000001	Limit weight sticker	1
	6			
	7			
	8			
	9			
	10			
	11			
	12			
	13			
	14			
	15			
	16			
	17			
	18			